Description / Manual

Solder Reflow Oven

SRO-702

Serial No.

Customer:

ATV Technology, Inc * 21 Concord Street * North Reading * MA 01864 * USA
Phone: +1 978 664 1948, Fax: +1 978 664 4819
E-mail: atvtec@att.net
Internet: http.://www.atv-tech.com

1	**Description Solder Reflow Oven SRO-702/704**
2	**>Win95/NT4.0 - Software for RS-232**
3	**Electrical Schematics**
4	**Gas/Vacuum Schematics**
5	**Cooling Water System**
6	**Labels**
7	**CE - Declaration**
8	
9	
10	
11	
12	**Manuals: Ilmvac, Schwille, Pfeiffer, VAT**

ATV Technology, Inc., 21 Concord St., North Reading, MA 01864,
Tel. 978-664-1948, Fax –978–664–4819

OUTPUT FUNCTIONS - DIGIT AFTER F

H = Heater on
C = Cooler on
A1 = Flowmeter F1 on
A2 = Flowmeter F2 on
A3 = Output 3 (Vac.) on
A4 = Output 4 on
A5 = Output 5 on
A6 = Output 6 on
A7 = Output 7 on

Default: H,C, A1 = on

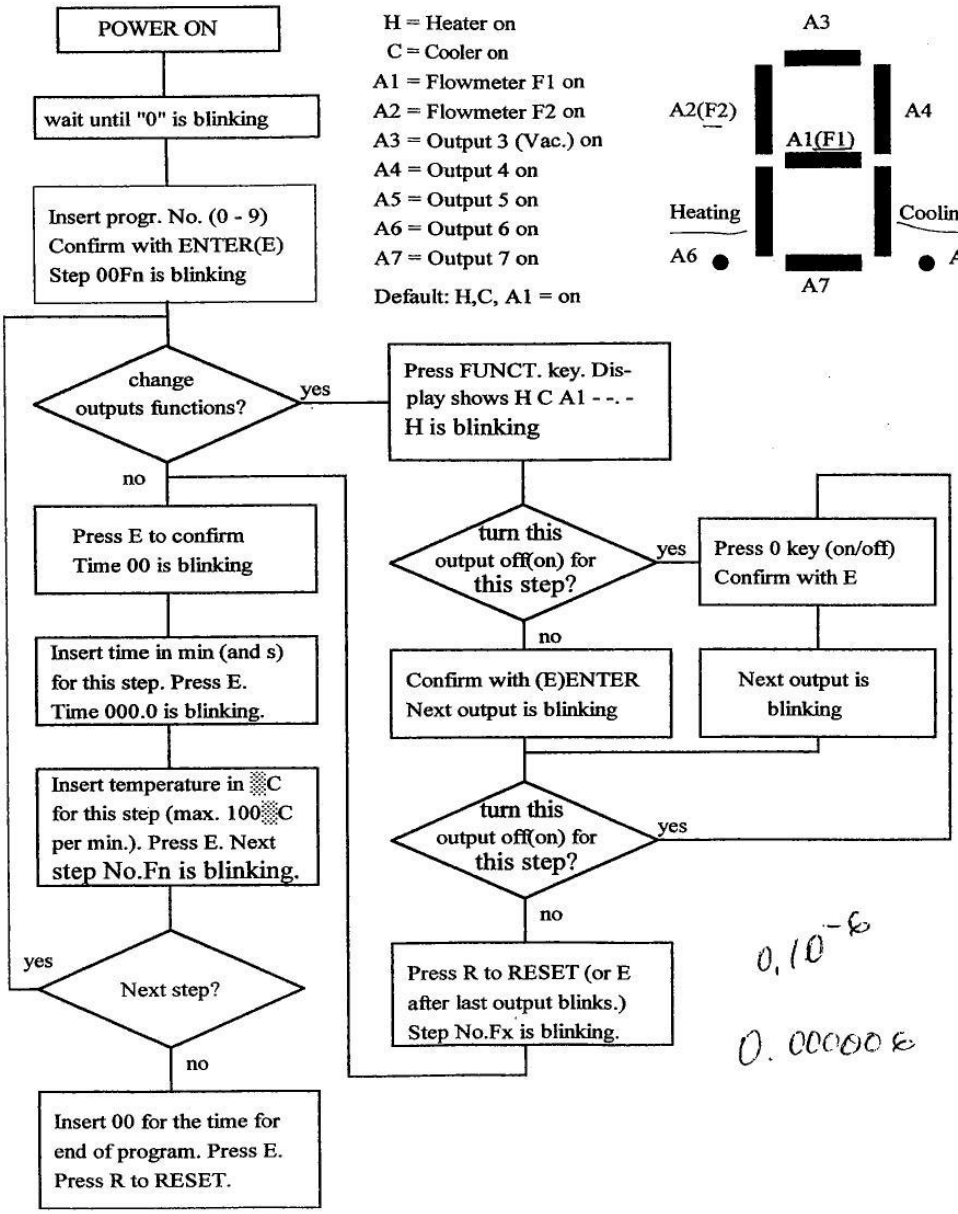

$0,10^{-6}$

0.000006

ATV Technology, Inc., 21 Concord Street, North Reading,
MA 01864 Phone: +1 978 664 1948, Fax: +1 978 664 4819

SOLDER REFLOW OVEN

SRO-702

OPERATORS MANUAL

***** WARNING *****

PLEASE READ THE OPERATING INSTRUCTIONS CAREFULLY, BEFORE ATTEMPTING TO OPERATE THE UNIT. WE DO NOT ASSUME ANY LIABILITY FOR INJURY, LOSS OR DAMAGE TO STAFF OR THE EQUIPMENT, IF THE UNIT IS NOT CONNECTED OR OPERATED PROPERLY. ONLY QUALIFIED PERSONNEL AND ELECTRONIC TECHNICIANS ARE ALLOWED TO SERVICE OR REPAIR THE EQUIPMENT. BEFORE OPENING THE ENCLOSURE, DISCONNECT FROM POWER SOURCE.

ATV Technology, Inc, 21 Concord Street, North Reading, MA 01864
Tel. 978–664–1948 Fax 978–664–4819

1. INSTALLATION

1.1. Power Connection:

The unit is supplied with a NEMA L 2130, 120/208 V, 30 Amps. power plug for connection to 3 phase + Neutral + Ground power source.

1.2. Cooling Water:

The cooling water must have a minimum differential pressure of 2 bar (30 psi) and max. absolute pressure of 4 bar (60 psi). **Anti-corrosion agent must be added to clean filtered water. We recommend the use of a chiller with a closed loop circulation, filled with automotive antifreeze solution for cars with aluminum radiator.** (available as option SRO-702-WC). Fittings for 8 mm O. D. pressure resistant hose are provided on the rear panel. A piece of 8 mm O. D. hose is supplied with the unit. We recomend to keep the cooling water temperature above the room temperature to avoid humidity condensation in the process chamber during loading.

1.3. Gas Connection:

6 mm Swagelock fittings are provided on the rear panel of the oven. Reducer 6 mm Ø to ¼" are supplied with the systems. Use only dry nitrogen or forming gas with a maximum of 15% Hydrogen.

Before use with pure Hydrogen the special safety option SRO-702-H2 must be installed.

Connect Gas Inlet Fitting F1 to a Process Gas line, line pressure 2 bar to 4 bar (30 psi to 60 psi).

Connect Gas Inlet Fitting F2 to a Nitrogen line, line pressure min. 4 bar (60 psi) max. 10 bar (150 psi).

Maximum gas flow is about 3,600 liters per hour (140 ft^3/h) at 6 bar (90 psi). Metal tubing is recommended at least for the process gas F1.

1.4. Gas exhaust:

The gas exhaust is provided on the rear panel with 8 mm "Swagelock". This exhaust line should be connected to the house exhaust using a hose 8 mm O. D. or larger, max. lenght 2 m (8 feet). Longer or smaller hose will cause increasing of the chamber pressure during cooling.

1.5. Compressed Air:

Compressed air is necessary for the operation of the vacuum valve only. The inlet fitting provided on the rear panel accept 8 mm. O. D. hose. (A piece of hose is supplied with the unit.) Minimum pressure of 4 bar (60 psi) is required. Max. pressure should not exceed 10 bar (150 psi). Because of the very low consumption of compressed air it is recomended to conect this inlet in parallel to the nitrogen line F2.

1.6. Remote control: (See separate Operators Manual for the RS 232 Interface)

The system is equiped with a RS 232 interface, allowing remote control via PC. The supplied cord must be connected to the serial port (COM 1 or COM 2) of the PC. For proper function of the interface **the PC must be turned on first, then turn on the SRO–704.**

1.7. Startup:

Lift the circuit breaker located on the back panel (only necessary when the oven is turned on for the first time.). Turn the power switch on the front panel to ON position. "SrO 704" will appear on the LED display followed by the date of the EPROM. After a few seconds, a blinking "0"

and the temperature in the chamber will be displayed. Check the oven chamber to make sure it is clean and free of any foreign objects. The chamber should be cleaned with IPA.

2. DESCRIPTION OF CONTROLS:

2.1. Display and Control Keys:

2.1.1. Display:

After powering up the display looks like this. The "0" is blinking. (Blinking characters are shown "*italic*")

PROGR.		STEP		FUNCT.		(min)		TIME		(sec)			TEMPERATURE °C		
0		-	-.			-	-	=	-	-			2	3.	4

PROGR. Shows the No. of the actual program. A maximum of 10 programs (0 to 9) can be stored.

STEP Shows the actual step No. A maximum of 100 steps (00-99) can be programmed and stored for each program.

FUNCT. Shows the condition of the controllers outputs. "Fn" means normal conditions Heater (H), Cooler (C), and Flowmeter F1 are on, all other outputs are off. (For further details, see the Short Programming Instruction)

TIME Shows the time rest (in minutes and seconds) until the end of the current step.

TEMPERATURE Shows the actual chamber temperature.

2.1.2. Control Keys:

START Start the desired program with step "00". Repeated striking of the START key during the program run will skip the current step (only if Heater (H) and Cooler (C) are off for this step.)

HOLD Only active during program run. Activating this key during program run will stop the time at the instantaneous temperature set point. The temperature is then set to this value until the HOLD key is pressed again. This condition is indicated by a blinking "=" between "min" and "sec" digits.

ACTUAL Only active during program run. Returns the display to show the actual chamber temperature, when changed before by the following 2 keys.

SET TEMP. Only active during program run. Shows the set temperature at the end of the actual step.

DEV. TEMP. Only active during program run. Shows the deviation between the actual and the set temperature.

FUNCT. Only active during programming. This key shows the controller parameters if pressed until the program No. is blinking. If pressed during the Step No. is blinking the display changes, allowing the activating or deactivating of the controller outputs for this step by pressing the "0" key. See Section 2.3.2. and Appendix 2.6 for further details.

RESET
a) During programming, it resets the program to STEP "00".
b) During program run, it interrupts the program and activates a cool-down routine, when the oven temperature is higher than 65°C. This condition is

shown on the display by "A". Repeated activation of the RESET key interrupts the cooling routine and resets the controller to HOME position.

ENTER a) Accepts and enters the blinking value on the display into the program.
b) Remove an ERROR message from the display.

2.1.3. System Reset: All values inserted by the control keys are stored in a battery buffered RAM. During the program run the values are read from this memory. Strong RF fields, power line noise or decreased battery voltage can cause disturbance of the stored program. It is recommended to do the System Reset before turn on for the first time and after long time storage without power.
Turn off the main power switch. Using a small pin gently press until it clicks the micro-switch, located behind the hole in the front panel underneath the "R" (RESET) key. Keep it pressed **(Don't force it!)**, turn the power on and wait until the temperature is displayed.
To check if the System Reset was successful press ENTER (E) four times until the temperature reading blinks. All readings should be "0"
WARNING: The System Reset will erase all recipies. Keep records of your programs or store all programs in your computer for restore.

3. PROGRAMMING:
Any blinking character can be changed using the numeric keyboard and/or accepted by pressing the "**E**" (ENTER) key. Use the "PROGRAMMING CHART" (page 11) to compose a program.

Press **R** to reset. **Program "0" blinks.** Insert the desired program No. The number blinks on the display. Press **E** to accept. Program number stops blinking. Next **Step "00.Fn" blinks.**

PROGR.		STEP		FUNCT.		(min)		TIME		(sec)	TEMPERATURE °C				
0		***0***	***0.***	***F***	***n***	-	-	=	-	-			**2**	**3.**	**4**

Press **E** to enter or **FUNCT.** to activate the **output programming mode**.

- If **E** is pressed the step "00" is accepted with the default output configuration "Fn" - Heater (H) on, Cooler (C) on, A1= Flowmeter 1 on, all other outputs are off.
- If **FUNCT.** is pressed the display changes to **output programming mode:**
-

PROGR.		STEP		FUNCT.		(min)		TIME		(sec)	TEMPERATURE °C				
0		**0**	**0.**	**F**	**n**	=	***H***	**C**	**1**	-	-	-	-	-.	-

H is blinking. Using the **"0"** key (on/off) the Heater can be turned off for this step. Press **E** to confirm.
C is blinking and can be turned off too. To return to previous step(s) simply enter the step No. when step is blinking following by **E**. The following outputs can be programmed in the same way.
In this mode, the 7-segment LED after "F" (n, in this case) indicates conditions of individual outputs, as follows: (see also the "Short Programming Instruction" in the appendix)
1) The bottom left segment on, indicates **Heater is on.**

2) The bottom right segment on, indicates	**Cooler is on.**
3) The middle horizontal segment on, indicates	**Flowmeter F1 is on.**
4) The top left segment on, indicates	**Flowmeter F2 is on.**
5) The top horizontal segment on, indicates	**Output A3 is on (vacuum).**
6) The top right segment on, indicates	**Output A4 is on (exhaust open).**
7) The bottom right point on, indicates	**Output A5 is on (Formic Acid bubler).**
8) The bottom left point on, indicates	**Output A6 is on (O_2 measurement).**
9) The bottom horizontal segment on, indicates	**Output A7 is on.**

After finishing the programming of the outputs for the step the display returns to:

PROGR.		STEP		FUNCT.		(min)		TIME		(sec)	TEMPERATURE °C				
0		*0*	*0.*	*F*	*n*	-	-	=	-	-	-	-	-	-.	-

Press **E** to accept the configured step. The Time "*00*" (min) blinks.

PROGR.		STEP		FUNCT.		(min)		TIME		(sec)	TEMPERATURE °C				
0		0	0.	F	n	*0*	*0*	=	*0*	*0*	-	-	-	-.	-

Insert the time for that step (i. e. 1 min and 30 sec.). Note that **accepting "*00*" will finish the program.** Press **ENTER** to confirm. Time value is accepted. **Temperature "*000.0*" blinks.**

PROGR.		STEP		FUNCT.		(min)		TIME		(sec)	TEMPERATURE °C				
0		0	0.	F	n	0	1	=	3	0	-	*0*	*0*	*0.*	*0*

Enter the desired temperature on the end of this step. A maximum of 300°C per minute may be entered. The temperature of the next step will begin at the temperature reached at the end of this step. In step "00" this value is 10°C. To avoid "overshoot" at the end of a step with short ramp-up time one or more short steps can be programmed in-between to "slow down" the ramp more softly. General rule is: take the 1/2 temperature ascent for the next step. **In the cooling mode the end temperature must be programmed 25°C lower as the desired end temperature.** For more details see the Appendix.

3.1. Hold and Wait Function:

This function is available with the High Vacuum Option SRO-704-HV only and allows the process chamber to be automaticaly pumped down to a preset vacuum value. The value can be preset on the Vacuum Controller. (For more details see the attached manufacturers manual). To activate this function press the "HOLD" key while the time is blinking. A "H" apears in the display instead of the "=" sign. During the program run the time in this step will be count up until the adjusted vacuum value is achieved. To disable this function press "HOLD" again while "H" is blinking.

4. OPERATION:

4.1. Program start:

Place the material to be heated in the process chamber, close the door and turn the handle until the door is locked against the "O"-ring seal.

PRESS RESET - The last program number that was run will be blinking. To start this program number press START or select another number using the key pads and press **START**. **(Do not confirm with E!).**

PRESS START - The program run starts. The program number, the step number, the time until the end of the step in minutes and seconds, and the actual temperature are displayed. The temperature set point and the difference between the set temperature and the actual temperature can be shown by striking the **SET TEMP** key or the **DEV TEMP** key respectively. The top dash of the "=" between "min" and "sec" is blinking and the time is stopped, until the temperature deviation is more than the value of "**dI**"(°C) of the parameter set. This "allowed" deviation can be changed in the parameter programming mode. For more details see the Appendix.

Set the gas flow on the flowmeters. A test run should be made to adjust the flowmeters for the steps where gas is required. (They must be activated for step "00" in the **output programming mode**). If two or more flowmeters are used for the same gas, adjust first the lowest range when the others are closed.

If the chamber temperature is higher than 10°C, the step duration will automatically be shortened after the start of the program by the time that would have been necessary to reach the actual temperature. If the temperature at the beginning is higher than the temperature at the end of the first steps, these steps will be automatically skipped over until a step is found where the end temperature is higher than the actual temperature at the time.

The clock can also be stopped by pressing the **HOLD** key (on/off function). The temperature will be kept at the momentary set value. This condition is shown by the blinking "=" between (min) and (sec). When the program is running the timer counts down to the end of each step.

During cooling, the clock will stop when the difference between the set temperature and the actual temperature becomes larger than 25°C. This condition is signalized by a blinking dash above the "=" between min. and sec. The process chamber can be cooled more quickly by activating F2 during the cooling step.

4.2. Aborting Program:

A program run can be aborted at anytime by striking the "**RESET**" key. A cooling routine will automatic start and will be shown by an "A" in the step field. The chamber will be cooled to 55°C. Pressing the R key again will stop the cooling and return the program to the "HOME" position.

Hint: If the R key is pressed by mistake press the START key and then the R key to return to the cooling step.

Note: The cooling routine can not start in a step, where the Cooling (C) has not been pre programmed for that step.

4.3. An Example of a Program:
A special form "PROGRAMMING CHART" (page 11) is recomended to compose a program. We recommend to sketch the time temperature profile and to determine the points where flowmeters have to be turned on or off. Also determine when vacuum and heat cycles occur before entering the program.

STEP	TIME	TEMP	OUTPUTS	F1	F2	F3	F4	REMARKS
No.	Min-Sec	°C	H C 1 2 3 4 5 6 7	(l/h)	(l/h)	(l/h)	(l/h)	
00	01 H 00	25	3	-	-	-	-	Vacuum
01	01 - 20	25	1	300	-	-	-	Backfill with exhaust closed*
02	01 - 00	25	3	-	-	-	-	Vacuum
03	01 - 20	25	1	300	-	-	-	Backfill with exhaust closed*
04	02 - 00	250	H C 1 4	300	-	-	-	Heat up to 250°C, open exhaust
05	00 - 30	250	H C 1 4	300	-	-	-	Soak at 250°C with process gas
06	02 - 00	50	H C 1 2 4	300	3000	-	-	Cooling down to 75°C
07	00 -00	10						End of program

In the first step "00" VACUUM is activated. The HOLD function keeps this step running for the time necessary to achieve the vacuum value programmed into the Vacuum Controller. The time setting is irrelevant (1 min. is default), because the time in this step is count up. In step "01" the chamber is filled back for 1 min. and 20 sec.* by the gas connected to Flowmeter F1. Step "02" repeat the vacuum to remove any rest of Oxygen. Step "03" backfills the chamber again. Step "04" starts the heating and the chamber is purged with the process gas, until the temperature reaches 250°C. In step "05" the
temperature is kept at 250°C until the parts in the chamber are soldered. In step "06" both flowmeters F1 and F2 are open for maximum cooling.

* The time for back fill depends on the flow rate of the Process Gas. **The pressure in the chamber must be higher than the athmospheric pressure when the exhaust opens, else air will be sucked into the chamber.**

SRO-704 OPTIONS:

SRO-704-TC: Additional, free placeable Type K Thermocouple is installed in the process chamber and is connected to a digital display with adressable RS 232 interface. The reading of the display is monitored as TEMP 1 on the computer screen and is shown as Time/Temperature curve. The Thermocouple can be attached to a part to be soldered. The offset to the actual temperature can be added to the programmed value to achieve automatically the necessary solder temperature on the parts.

SRO-702-HV: This Option include an powerfull oil free diaphragm fore pump, turbomolecular pump with controller, high vacuum valve and combined Pirany/Penning high

vacuum measurement system with digital display. Please, refer to the attached Original Manufactureres Manuals for more details. The High Vacuum Option allows the process chamber to be pumped down to better 1.10^{-5} mbar (0.01 mTorr) removing almost completely the Oxygen for excelent solder results. This high vacuum also has a desoxidizing and cleaning effect. Please, avoid opening of the Vacuum Gate Valve when high pressure is present in the chamber - this may destroy the Turbomolecular Pump. including

SRO-704-OP Overpressure capability with pressure controller and digital display. This Option allows the gas pressure in the process chamber to be increased to 3 bar (90 psi) absolut. Increased pressure enhance the cleaning effect of Forming Gas. Also the sequencial increase and release the pressure cause the melted solder to "pulse" (shrink and expand). This micro moving of the solder act as scrubbing and help for better weting of the soldered surfaces by the solder. For more details and about "how to adjust the pressure" please, refer to the attached Original Manufactureres Manual.

SRO-704-FM: Maximuum of two additional Flowmeters with solenoid valves and separate inlets can be installed in the front panel and controlled by the controllers outputs. The appropriate controller outputs are indicated on a sticker on the front panel. Any not flamable process gas can be connected to these inlets. For using Hydrogen the option SRO-704-H2 must be installed.

SRO-704-OM: OXYGEN MEASURING SYSTEM

Before using the Oxygen Analyzer read carefully the attached Original Manufactureres Manual!

An additional gas line with a solenoid valve and a throttle valve is installed to allow permanent purging of the O_2 Monitor with pure Nitrogen (5.0 or higher). This is necessary to accelerate the reaction of the Monitor. To activate this additional purging press the **O_2 purge** - button until it shows green. The purge line must have min. flow of 100 l/h. The flow depends on the inlet pressure of the line. It is factory adjusted at 3 bar (45 psi) inlet Nitrogen pressure.

Keep the main "CAL" - switch in closed (arrow down) position when the Oxygen Analyzer is not in use.

1. Press the main power button "NETZ" before turning on the SRO-704 system.
2. Press the **O_2 purge** - button to show green.
3. Turn on the main power of the SRO-704 system. The Oxygen Analyzers display shows 1083.
4. Wait until the red ball of the flowmeter of the Oxygen Analyzer falls down.
5. Slowly turn the "CAL" arrow to "M" (measurement) position.
6. Wait 2-3 min. until the reading of the display start decreasing. After several minutes the Oxygen Analyzer shows the O_2 content of the purging gas.

To monitor the O_2 content of the gas, exhausting the SRO-704 - chamber, activate output A6 in the program step you like to monitor. The output A6 commutate the Oxygen Analyzer inlet from the purging line to the SRO-704 chamber exhaust. Allow 1-2 min. time to stabilize the reading.

SRO-704-QP: The Quartz plate allows direct heating of the parts for soldering. However the temperature of the parts depends on their mass and surface behaviors. To achieve sertain controll over the temperature in this case a temperature reference block is supplied. The main Thermocouple must be attached to this block. The displayed "actual" temperature generally does not correspond to the real part temperature. For best results attach the second Thermocouple (Option SRO-704-TC) to a dummy part to determine the temperature offset and to make correction in the temperature profile.

SRO-704-AO Automatically opening/closing of the chamber. This Option allows the attachment of the Solder Reflow Oven SRO-704 to automatic Pick and Place system. A pushbutton on the front panel is used for manual/automatic open and close of the chamber cover.

SRO-704-H2 Safety system for use with Hydrogen incl. flame-off unit. See additional Manual.

SRO-704-WC Water cooler with closed circulation. See the attached Original Manufactureres Manual.

APPENDIX

ATV Technology, Inc, 21 Concord Street, North Reading, MA 01864
Tel. 978–664–1948 Fax 978–664–4819

A.1. Control Parameters:
The DDC temperature controller (Direct Digital Controller) was developed especially for the ATV furnaces. The control action is defined by 5 parameters (Kp, Tn, Tv, Td, dI) which are inserted corresponding to the controlled system. The controlled system consists of the heating

PROGR.		STEP		FUNCT.		(min)		TIME		(sec)	TEMPE RATUR E °C				
0			.			**K**	**p**	=					*0*	*7*	*5*

performance, the absorption capacity of the hot plate, the heat loss due to the oven design, as well as the load in oven chamber and the heat loss from the purging gas.
The **Kp** constant represents the proportional part of the control (controller's amplification). The setting area lies between 010 and 100. The higher the value of °C, the more energy is inserted into the heater and the cooler. °C values higher than 100 should be avoided because it will bring the oven into oscillation. The default °C value stored into the EPROM is **075°C**.
The **Tn** is the integral part of the control and determines the reaction time of the controller. The bigger the load and the lower the temperature the higher Tn must be set. The set area is between 1 and 999. Very low Tn values can lead to a surge in heating and/or cooling action and cause temperature oscillation. The default Tn value stored into the EPROM is **250 sec**.
The "looking - ahead" time **Tv** influence the oscillation amplitude of the heating power. It can be decreased down to 1 sec. if the oscillation is too high. Default value is **1 sec**.
The derivative part of the control **Td** has very little influence on control. The Default value is **5 sec**.
The fifth parameter **dI** determines an allowed temperature difference between the actual and the set value in °C. The clock stops temporarily until the actual temperature reaches the set point. The setting area for dI is 1°C to 29°C. Default value is **29°C.**
Because of the time stops the length of the original program increases. This increase is depending on the programmed profile and must be accepted for a proper control.

A.2. Changing the Control Parameters:
The control parameters are valid for all steps in a program but they can be different for different programs. While the program is running, the controller updates every 400 ms the set value for the power, taking into consideration the previous value. The default controller parameters stored in the EPROM are experimentally determined values allowing proper control over wide range of temperatures, moderate loads and purging gas volumes. They are valid for all steps in all programs

Special applications however may require changes of the controller parameters to achieve better control in extreme situations. The parameters can be changed by pressing the FUNCT. key,

during the program No. blinks following by the desired Program No. and the **E** key. The display changes to:
The Kp value is blinking and can be changed. The values for Tn, Tv, Td and dI follows if you continue to press Enter.

WARNING: Changing parameters must only be done by someone familiar with this control system. Arbitrary changes of the control parameters could lead to complete control system failure. The control parameters should be changed only one at a time and in small steps. After each change the results should be reviewed before another change is made. The default parameters are stored in the EPROM and can be restored after a System Reset (2.1.3.), but by doing so all stored programs and parameter changes will be erased and replaced by the default values.

A.3. Maintenance:
The SRO system requires very little maintenance and will work reliable for years if the following rules are observed:
1. Keep the oven chamber and the quartz tubes clean. Never touch quartz with bare hands.
2. Keep the "O" ring and door seal area clean and debris free.
3. Never rest hot parts on the "O" ring.
4. Keep the max. temperature as low as possible for each process. Do not overheat the process plate.
5. For cooling use closed loop chiller filled with filtered tap water only. Distilled water is aggressive and can corrode the cooling channels and fittings.
6. Open and close the chamber cover gently, don't let it spring open quickly.
7. Clean the chamber and the Process Plate with Isopropyl Alcohol only.

The ends of the 8 infrared lamps are cooled to guarantee a long life. The lamp cooling vents (screens) are located on each side of the lower part of the process chamber be sure these vents are not blocked to allow proper lamp cooling during operation. If the control system displays an error message one or more of the lamps may be defective. For more details see TROUBLESHOOTING below.

A.4. TROUBLESHOOTING
A.4.1. Error messages:

The microprocessor-based controller recognizes most frequent occurring errors and shows them on the display. The ERROR - messages remains in the display until the "E" key is pressed.

Error 1 **Thermocouple break** or interruption in its connections. When this Error is displayed at elevated temperature the program run is stopped and the cooling is activated for 30 min.

Error 2 **Door is open.** The door was opened during the program run or was not closed correctly. Check the door lock, the door lock sense switch and their connections for proper operation. When this Error is displayed the program run continues for 10 sec. to allow the operator to close the door without interruption. If the door is not closed during this time, the program run is interrupted and the cooling is activated. The Hot Plate is cooled down to about 50°C

Error 3 **No cooling water.** The water cooling is not sufficient or interrupted. Check water pressure at oven inlet (min. 2 bar, max. 4 bar). When this Error is displayed the program runs for 10 sec. than the cooling is activated to cool down to about 50°C. The activated flowmeters remains activated until the end of the cooling.

Error 4 **Software error.** EPROM is defective. Contact ATV for new EPROM.

Error 5 **Overheated plate.** The oven temperature has exceeded the maximum allowed temperature with more than 50°C. When Error 5 is displayed the program run continues for 10 more sec. If this error is caused by an overshoot the controller will automatically correct the temperature in this time.

If after 10 sec. the temperature has not decreased the program run will be interrupted and the cooling will be activated. The activated outputs (flowmeters) remain activated until the temperature drops below 50°C.

If the lamps are still on there is a serious defect in the power controller or the earth point of the main voltage is floating.

If the temperature of the oven chamber has exceeded 60°C, the independent Overtemperature Protector will be activated. This device disconnect the lamps from the main power. **The lamps remain disconnected until the main switch on the front panel is turned off.**

Error 6 **Insufficient lamp power** in the outer group of 4 lamps.

Error 7 **Insufficient lamp power** in the inner group of 4 lamps.

If one or more of these Errors are displayed they is no, or too low current through the lamps of a group. The reason for this can be:

No power in the phase. Check the main power line for voltage in all 3 phases.

The main voltage is too low. Check the main voltage in all 3 phases.

The fuse-link in the power block is broken. Check the fuses.

One or more lamps are defective. The infrared lamps must be examined by an authorized person or by an appropriate customer service technician. Disconnect at least 3 of the lamps of each group. Check every lamp individually. Replace defective lamps.

REMARK: The ERROR messages 6 and 7 are displayed only when the lamps receive the full (100%) power for min. 10 sec. Because, in a regular case, the power is set below 100% an ERROR message may not occur even if one lamp is defective. To check the lamps a

program with a very fast temperature ramp must be used, allowing the system to call for 100% power:

```
;LAMPTEST.PDF
;stored 15.10.1996 at 17:56:36
;{0}
;STEP, TIME,TEMP,H C 1 2 3 4 5 6 7, Kp, Tn, Tv, Td, dI
  00,01:00,0300,H C 1 - - - - - -,075,250,001,005,029
  01,01:00,0020,H C 1 - - - - - -
```

An additional load must be placed on the Hot Plate if the power can not reach 100%.

To remove an ERROR Message from the display press ENTER

A.4.2. Other possible defects:

The circuit breaker fails at program start or during the program:

- Reset the system (ref. to 2.1.3.) and insert the program again.

ATV Technology, Inc, 21 Concord Street, North Reading, MA 01864
Tel. 978–664–1948 Fax 978–664–4819

STEP	TIME	TEMP	OUTPUTS	F1	F2	F3	F4	REMARKS
No.	Min:Sec	°C	H C 1 2 3 4 5 6 7	(l/h)	(l/h)	(l/h)	(l/h)	
00	:		_____					
01	:		_____					
02	:		_____					
03	:		_____					
04	:		_____					
05	:		_____					
06	:		_____					
07	:		_____					
08	:		_____					
09	:		_____					
10	:		_____					
11	:		_____					
12	:		_____					
13	:		_____					
14	:		_____					
15	:		_____					
16	:		_____					
17	:		_____					
18	:		_____					
19	:		_____					
20	:		_____					
21	:		_____					
22	:		_____					
23	:		_____					
24	:		_____					

ATV Technology, Inc., 21 Concord St., North Reading, MA 01864,
Tel. 978-664-1948, Fax –978–664–4819

WinATV

Manual

Version 07/28/99

ATV Technology, Inc., 21 Concord St., North Reading, MA 01864,
Tel. 978-664-1948, Fax –978–664–4819

TABLE OF CONTENTS

ATV Technology, Inc., 21 Concord St., North Reading, MA 01864,
Tel. 978-664-1948, Fax –978–664–4819

1 Requirements of WinATV

1.1 Software

Windows 95 or higher level

1.2 Hardware

Pentium 133 MHz or higher

2 Installation of WinATV

Insert the Disc labeled 1 of 2 in your floppy drive. Click on "Start" then on "Run". Type a:\setup and press "Enter" or click "OK". Follow the instructions on the screen .

3 Start WinATV

Make sure the computer is on and connected to the oven using the supplied Serial Port Cable and **then** turn on the oven.

Click: "Start"→"Programs"→"WinATV"→"WinATV". The ATV-Screen appears.

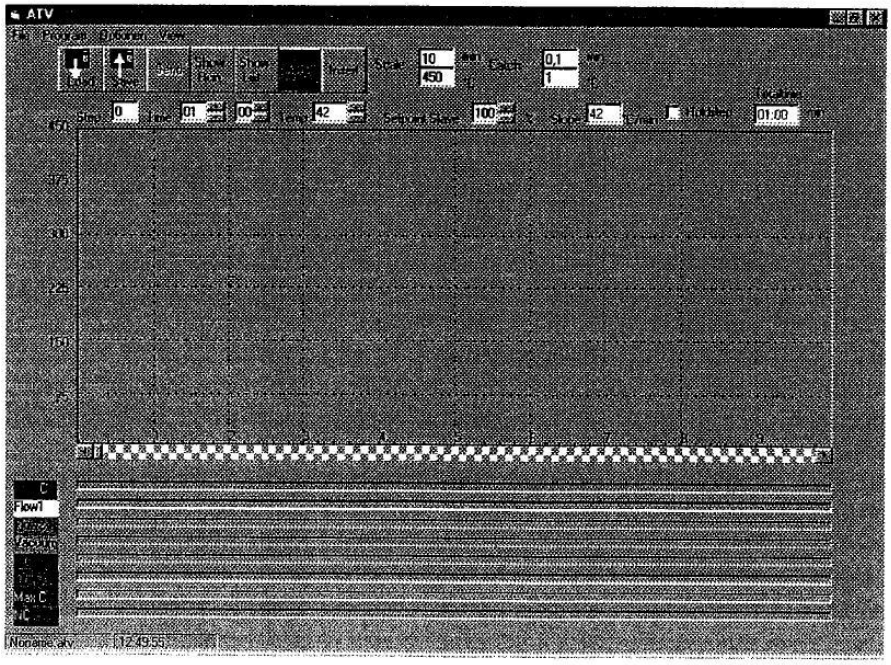

3.1. Explanation of the ATV-Screen:

LOAD-Button:	Uploads existing recipes (*.ATV-File) from hard disc or floppy disc
SAVE-Button:	Saves active recipe on hard disc or floppy disc
SEND-Button:	Sends active recipe to the furnace
SHOW RUN-Button:	Shows recording
SHOW LIST-Button:	Shows the recipe steps as a list
START–Button:	Starts oven run
INSERT-Button:	Adds steps to recipe
SCALE-min-Window:	Adjusting time-scale
SCALE-°C-Window:	Adjusting temperature-scale
CATCH-min-Window:	Adjusting of automated Minute-Snap-Scale for Programming
CATCH-°C-Window:	Adjusting of automated Temperature-Snap-Scale for Programming
STEP-Window:	Shows recipe-step
TIME-Window:	Shows the time of the active step in min. and sec.
TEMP-Window:	Shows the final-Temperature of the active step in °C
SETPOINT-SLAVE-Window:	Shows the percentage of the Slave-Setpoint
SLOPE-Window:	Shows the temperature-gradient
WAITSTEP-Window:	Adjusting of Waitstep (Option)
TOTALTIME-Window:	Shows the total-time of the recipe

4 Creating Process recipes

4.1 Previous adjustments

Scales and Raster-Scales:

Click on the "SCALE-min" Window and insert your required time-scale. Go to "SCALE-°C" Window and insert your required temperature-scale. (You can use the "TAB" key too to go to the next window)

Go to the "CATCH-min" window and adjust your "TIME Snap" – this is the smallest time increment you can program for the TIME. After adjusting your Time-Snap go to the "CATCH-°C" window and adjust your Temperature-Snap.

The reason for adjusting the Snap is to make it easier to write recipes. If you for example set CATCH-min = 1 and CATCH-°C = 50° the final Point of the recipe step will be rounded to a raster of one minute on the time-scale and 50°C on the temperature-scale.

It is possible to open several windows at a time using the left mouse-button. Closing a window will activate another one.

If you change the value in a window you must leave it to retain the new value. (You can leave a window by pressing "TAB", "Enter" or click another window with the left mouse button)

4.2 Create temperature profiles (recipes):

They are two ways to create a recipe:

a) Using the mouse: This method is fast when the time in a step is not shorter than about 10% of the total recipe time and the smaller temperature increment in a step is 10°C or more.

Set the "CATCH-min" to 1 and the "CATCH °C" to 10°C. Move the pointer in the area of the first step, press the left mouse button and keeping it pressed drag a line to the time/temperature point for the first step. Release the button and process in the same way for all other steps. The time/temperature values for each step are shown in the upper windows and can be corrected for each step using the arrow buttons.

This method is fast when the time in a step is not shorter than about 10% of the total recipe time and the smaller temperature increment in a step is 10°C or more.

Set the "CATCH-min" to 1 and the "CATCH °C" to 10°C. Move the pointer in the area of the first step, press the left mouse button and keeping it pressed drag a line to the time/temperature point for the first step. Release the button and process in the same way for all other steps. The time/temperature values

for each step are shown in the upper windows and can be corrected for each step using the arrow buttons.

The last step in a recipe can be deleted by clicking the **right mouse button**

b) Using the "TAB" key:

Move the pointer outside the central screen area, preferably in the upper left corner of the screen. With the "TAB" key you can jump between the upper windows and insert the desired values or change the default values using the arrow buttons. The recipe appears on the screen.

The momentary active recipe step is marked by a white background.

4.3 Changing of recipe steps:

To change the time or the temperature in a recipe step activate it with the left mouse-button in the PROGRAM WINDOW. Click the TIME and/or the TEMP window. The modification can be done over the ARROW-Buttons which are located on the right side of the window. It is also possible to activate the windows with the left mouse-button and change the value over the keyboard. In case you prefer to change the value over the keyboard the mouse-arrow must be outside of the PROGRAM WINDOW. If you want to move to the next window use TAB-button or ENTER. To close a window activate another one

The modification is not related to the previous adjusted raster.

4.4 Insert and delete of recipe steps

To **insert a step** highlight the next step and click on the "INSERT" button. Adjust the desired values for the new step using the upper buttons. To **delete a step** move the pointer in the highlighted area and Click the **right mouse-button.**

4.5 Activating and deactivating of outputs, heating and cooling for each step.

The bars below the PROGRAM WINDOW are related to the Heating H , the Cooling C and the controller outputs. They are marked with a colored background. Heating and Cooling are automatically activated in every recipe step. You can deactivate heating and cooling in the actual (highlighted) step by clicking on the H- and/or C-Button. To activate or deactivate outputs like Flowmeter or Vacuum click on the corresponding bars for each step

4.6 Save the recipe!

Don't forget to save the created recipe as a *.ATV-File. They are two options. First option is to Click the SAVE-Button. Second is to click SAVE on the FILE-menu.

5 Start the oven and Record the run:

5.1 Sending recipe to the furnace

The created and saved recipe is still not sent to the oven. To transfer it click the SEND-Button.

A new window opens and asks for the Program location. You can send the recipe to anyone of the 10 (0 to 9) program locations of the controller. Select the program location for your recipe and confirm with OK.

5.2 Executing and recording a recipe:

Click the green START-Button to start the oven run. A window appears and asks for a program location. Choose the program location and confirm with OK.

Next window asks for a name of the .DAT-File where all the oven data are recorded. Type a file-name and Click the SAVE-Button. The run will be recorded automatically under this file-name.

The ATV-Screen changes to the Record-Screen:

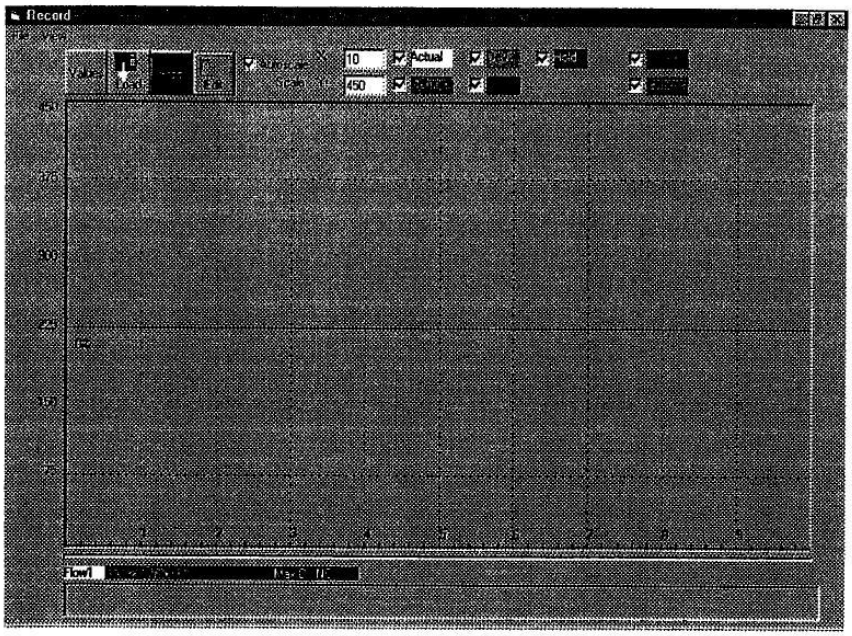

5.3 Explaining the Record-Screen:

LOAD-Button:	load of previous recipe recordings (*.DAT-File)
STOP-Button:	Stops the oven run
EDIT-Button:	Changing to ATV-Screen to edit the recipe
AUTOSCALE-window:	Activating or Deactivating of Autoscale
SCALE-min-window:	Adjusting time-scale in min.
SCALE-°C-window:	Adjusting temperature-scale in °C
ACTUAL-window:	Activating or deactivating of showing the actual temperature at the RECORD WINDOW
SETPOINT-window:	Activating or deactivating of showing setpoint-temperature at the RECORD WINDOW
DEV-window:	Activating or deactivating of showing deviation-temperature at the RECORD WINDOW

POWER-window:	Activating or deactivating of showing power for heating (red) and cooling (blue) at the RECORD WINDOW
HOLD-window:	Activating or deactivating of showing Holdsteps at the RECORD WINDOW
EXTERN1-window:	Activating or deactivating of showing INPUT1 at the RECORD WINDOW
EXTERN2-window:	Activating or deactivating of showing INPUT2 at the RECORD WINDOW

5.3.1. Values screen:

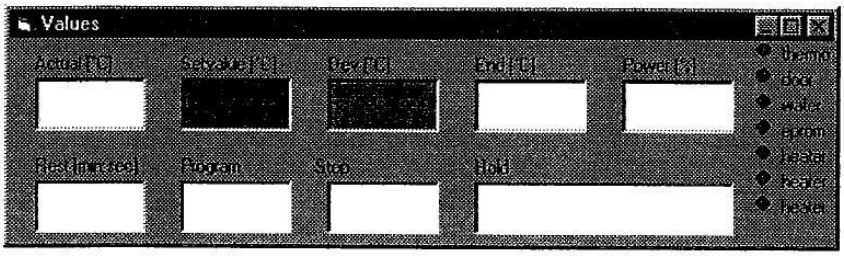

VALUES-Icon:	Open and close VALUES-window
Actual [°C]:	Actual temperature in °C
Setvalue [°C]:	The momentary set temperature value.
Dev [°C]	Deviation between momentary set value and actual value in °C
End [°C]:	End temperature of the step
Power [%]:	Percentage of the full heating (red) and cooling (blue) Power
Rest [min:sec]	Remaining time of the actual step
PROGRAM:	PROGRAM location
Step:	Actual step
Hold:	Reason for Time Hold

The green points on the right side of the window shows normal operation. If they change to red a problem have occurred. Refer to the TROUBLESHOOTING section of the manual

6 Additional features

6.1 Changing controller parameters

Normally the controller parameters don't need to be changed. Arbitrary change of the controller parameters may make the oven to oscillate. If any change is necessary because of unusual use of the furnace refer first to the Appendix in the main manual. Changes must be done by experienced engineer only.

To change the controller parameters click on PARAMETER in the OPTIONS menu. The following window appears

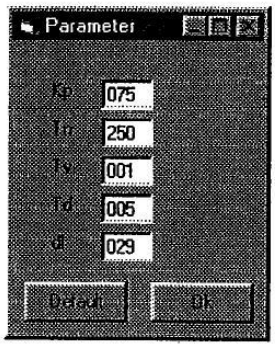

Change parameters and confirm with OK.

Click DEFAULT to return to the original (default)

6.2 Using the Slider

The Slider can be used to get detailed information at a specific time in the recorded recipe-run.

Move the pointer to a point on the recorded trace on the screen and click the left mouse button.

Following screen appears in the upper right corner of the screen:

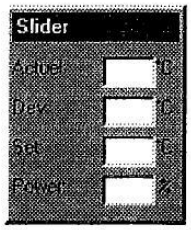

You can activate or deactivate the Slider using the VIEW-menu at the Record-screen.

6.3 Edit of previous recordings

In order to have a look at previous recordings Click the LOAD-Button at the record-Screen. Select the *.DAT-File and Click the OPEN-Button to confirm. Deactivate with the left Mouse-button the AUTOSCALE-feature. To change the time-scale select "SCALE-min-window" and change the value. Use the TAB-button or activate another window to close the "SCALE-min"-window.

6.4 Shutdown WinATV

Open File-menu at ATV-Screen and choose END to shut down WinATV.

If you have questions about WinATV or other products of our company don't hesitate to contact us.

ATV Technologie GmbH
Am Kiesgrund 2-4
D – 85622 Feldkirchen / München
Tel.: +49 (0) 89 – 903 00 58
Fax : +49 (0) 89 – 903 13 84
Email: atv-technologie-gmbh@t-online.de
www. Atv-tech.com

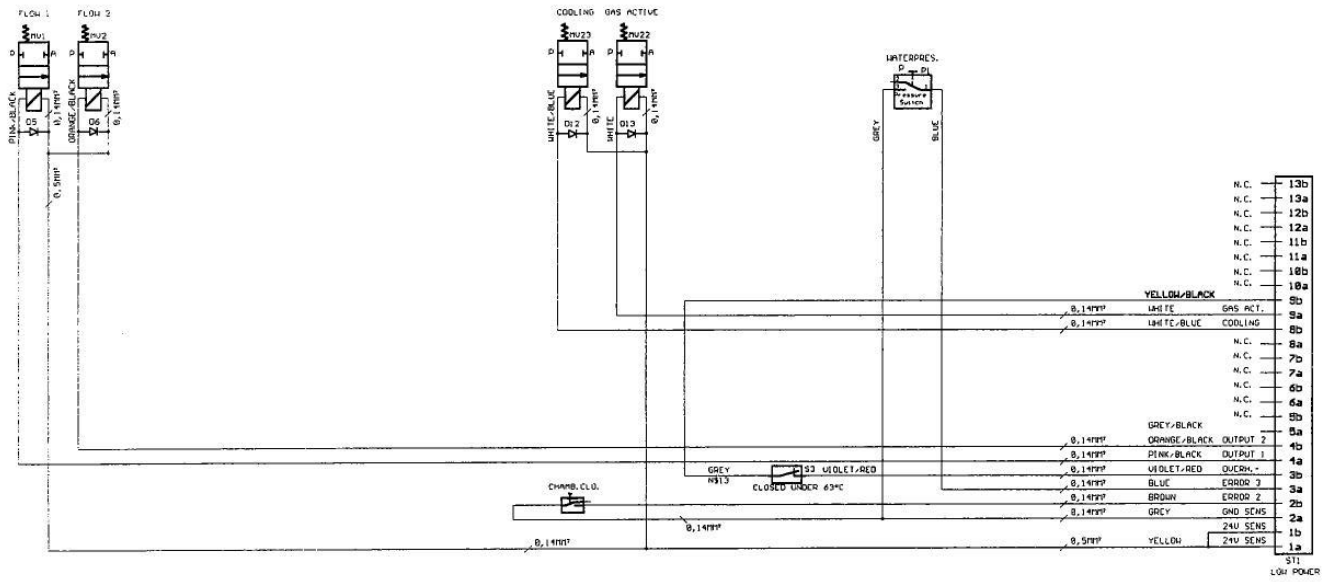

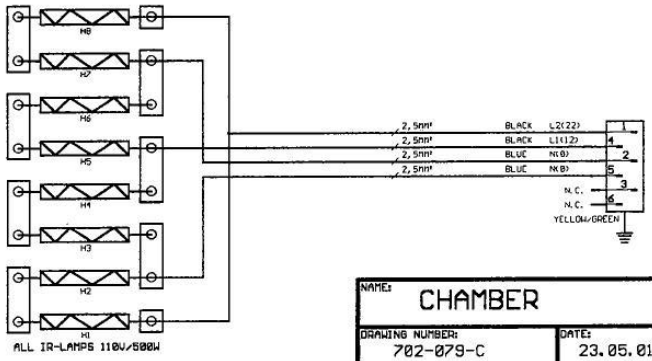

NAME: CHAMBER		
DRAWING NUMBER: 702-079-C		DATE: 23.05.01
SERIAL NUMBER: 079	TYP: SRO 702	ATV TECHNOLOGIE GMBH AM KIESGRUND 2-4 85622 FELDKIRCHEN GERMANY TEL. (089) 9 03 00 58
DESIGNED BY: HRe	APPROVED BY:	

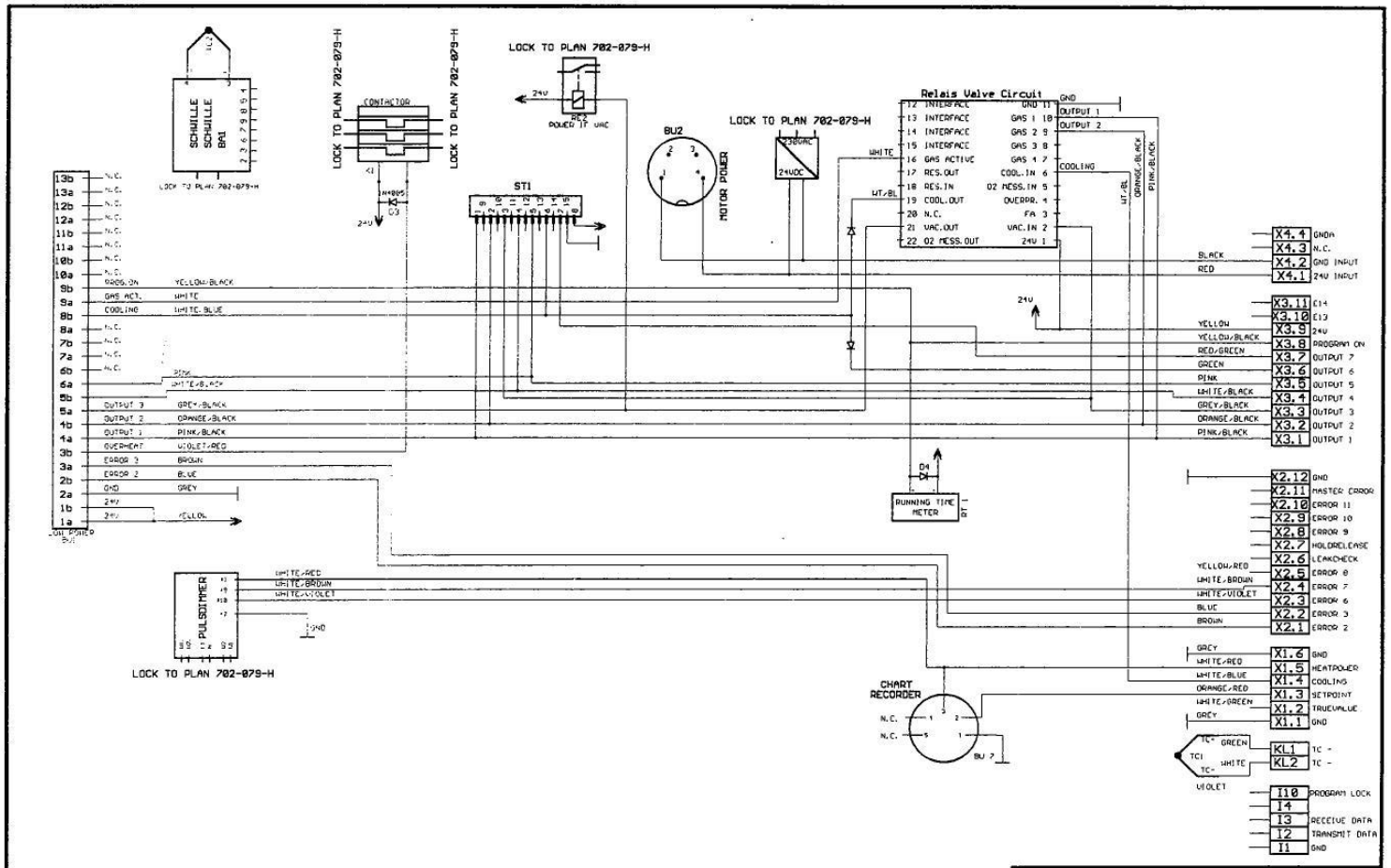

NAME: CONTROL UNIT		
DRAWING NUMBER: 702-079-L		DATE: 23.05.01
SERIAL NUMBER: 079	TYP: SRO 702	ATV TECHNOLOGIE GMBH AM KIESGRUND 2-4 85622 FELDKIRCHEN GERMANY TEL. (089) 9 03 00 58
DESIGNED BY: HRe	APPROVED BY:	

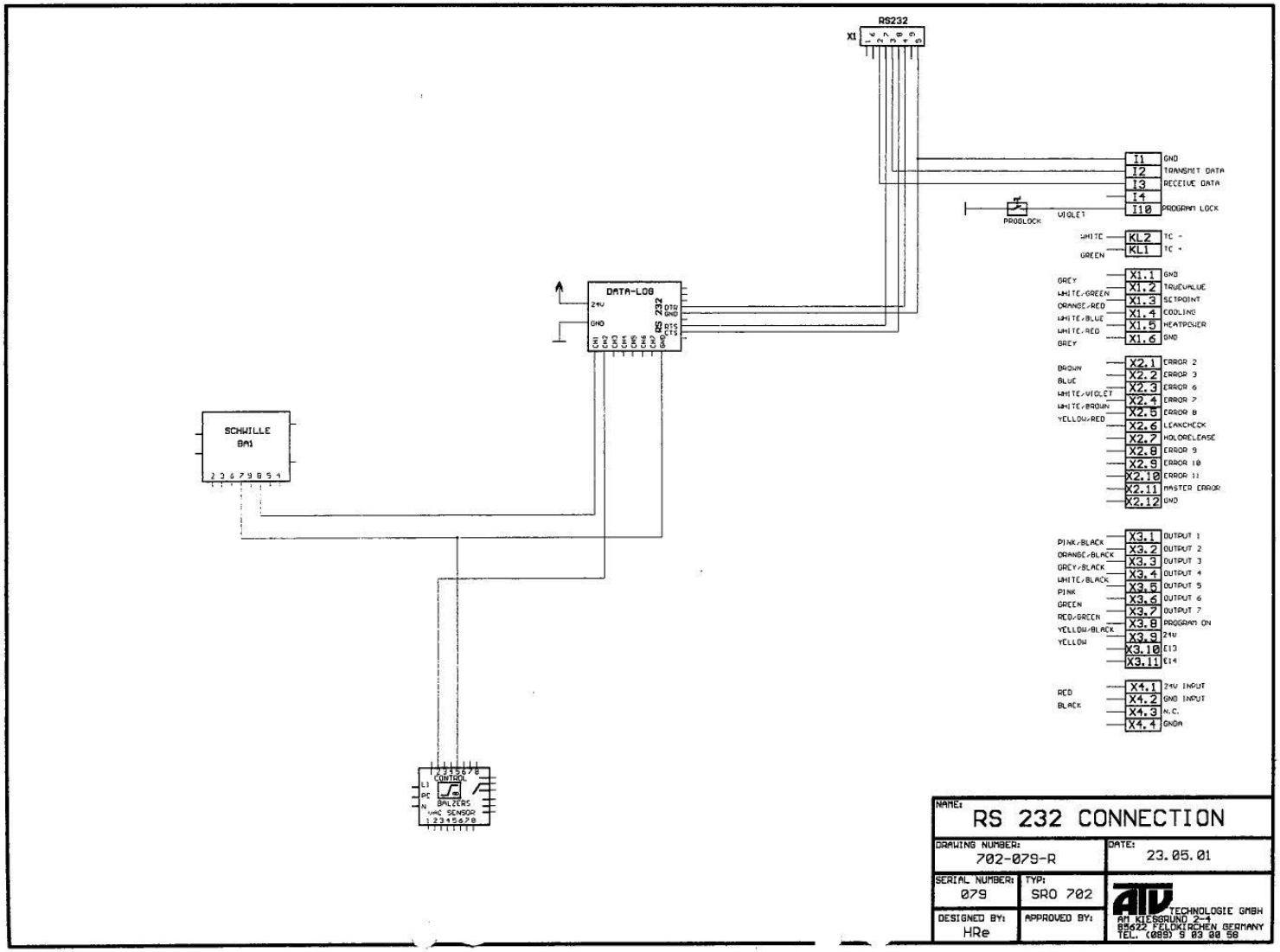

NAME: RS 232 CONNECTION

DRAWING NUMBER: 702-079-R	DATE: 23.05.01
SERIAL NUMBER: 079 / TYP: SRO 702	ATV TECHNOLOGIE GMBH
DESIGNED BY: HRe / APPROVED BY:	AM KIESGRUND 2-4 85622 FELDKIRCHEN GERMANY TEL. (089) 9 03 00 56

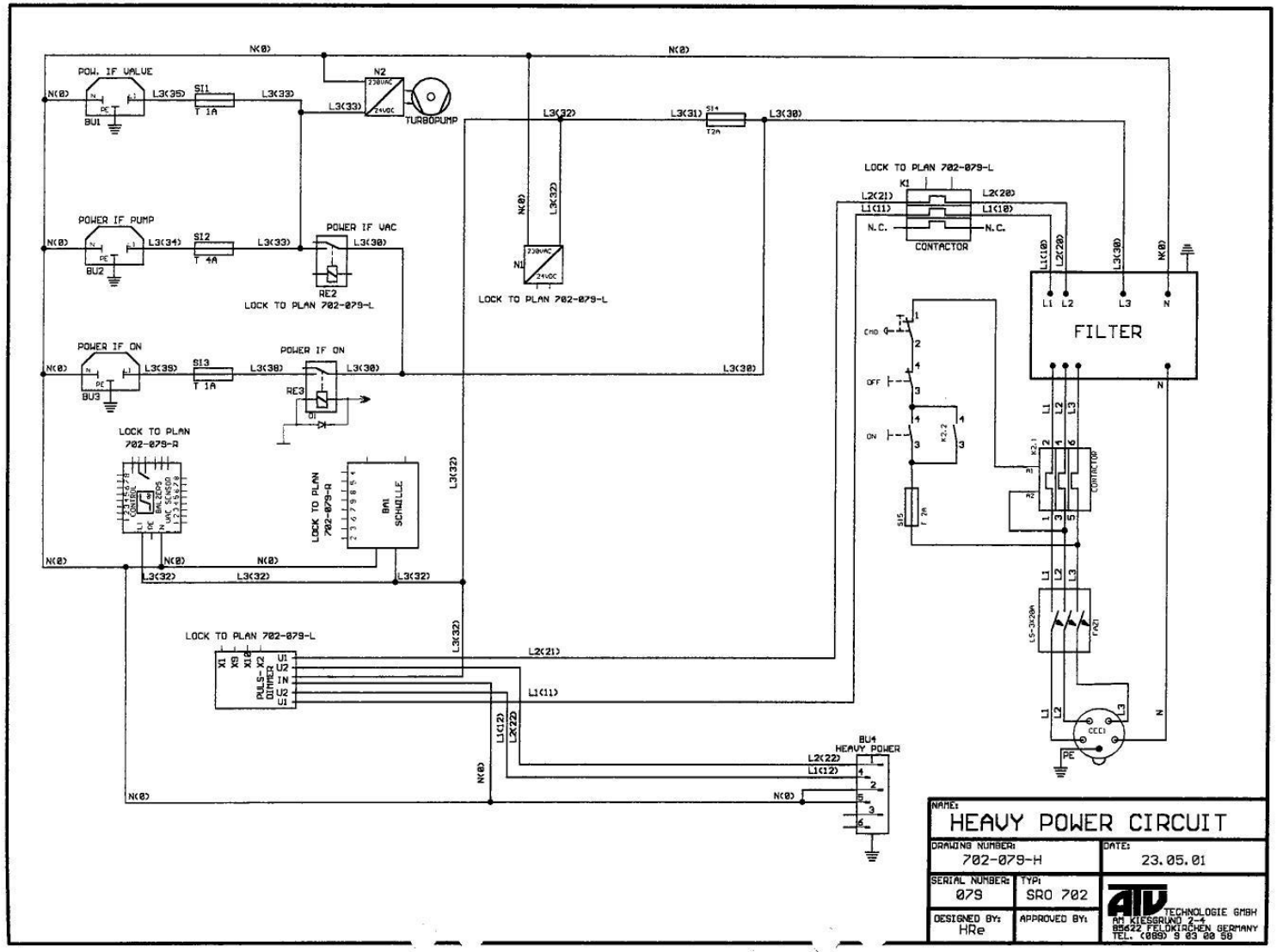

NAME: HEAVY POWER CIRCUIT		
DRAWING NUMBER: 702-079-H		DATE: 23.05.01
SERIAL NUMBER: 079	TYP: SRO 702	ATV TECHNOLOGIE GMBH AM KIESGRUND 2-4 85622 FELDKIRCHEN GERMANY TEL. (089) 9 03 00 58
DESIGNED BY: HRe	APPROVED BY:	

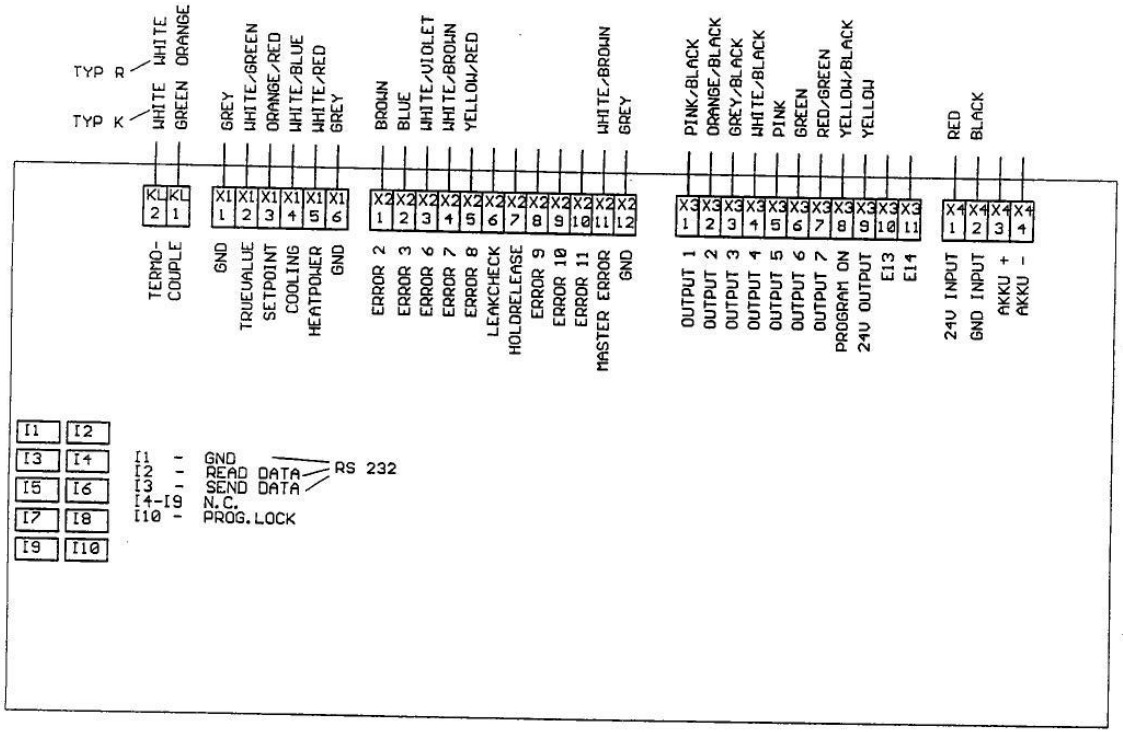

NAME: TEPCON TYP D CONTROLER CONECTION		
DRAWING NUMBER: SRO PEO		DATE: 21.10.1999
SERIAL NUMBER:	TYP:	ATV TECHNOLOGIE GMBH AM KIESGRUND 2-4 85622 FELDKIRCHEN GERMANY TEL. (089) 9 03 00 58
DESIGNED BY: ME	APPROVED BY:	

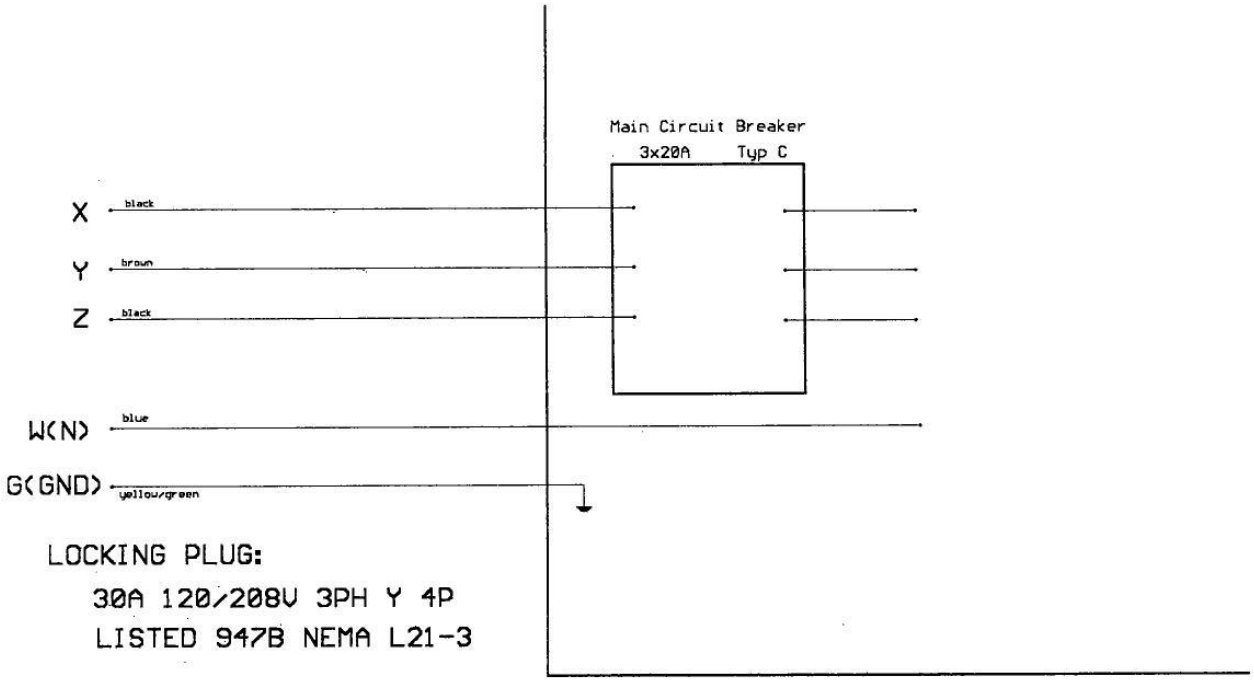

LOCKING PLUG:

30A 120/208V 3PH Y 4P

LISTED 947B NEMA L21-3

All power cords 2.5 qmm cross section

All power cords AWG 14

Benennung: CONNECTION DIAGRAM	
Datum: 02.05.2001	Zeichnungsnummer: 702_USA.SCH
Seriennr:	ATV Technologie GmbH Am Kiesgrund 2-4 85622 Feldkirchen Tel. (089) 9030059 Fax: (089) 9031384
Typ: SRO 702 USA	

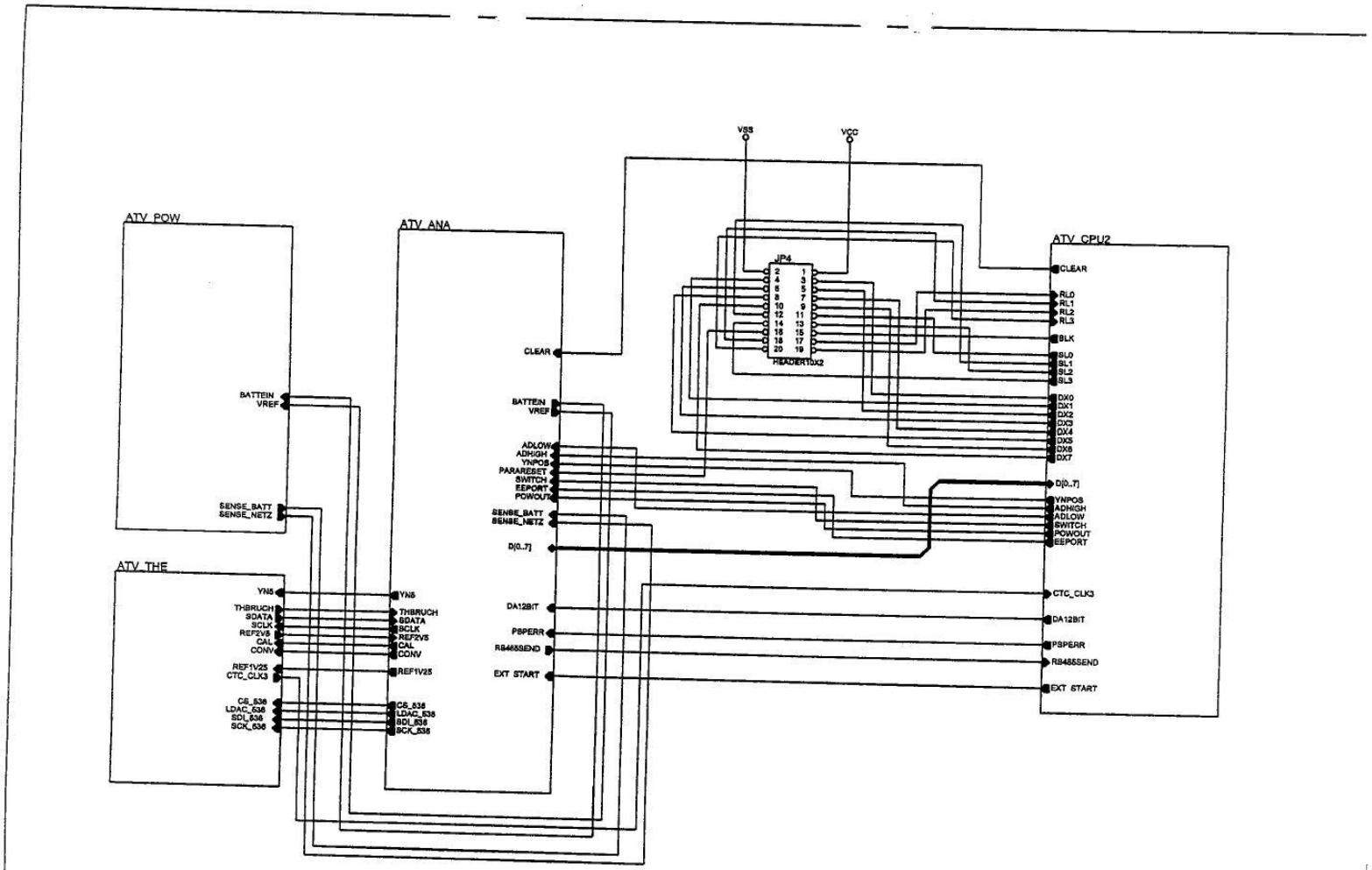

Title	ATV TECHNOLOGIE	
	TEPCON GESAMTANSICHT	
Size B	Document Number ATV_PEO.SCH	REV D
Date: January 3, 1999	Sheet 1 of 6	

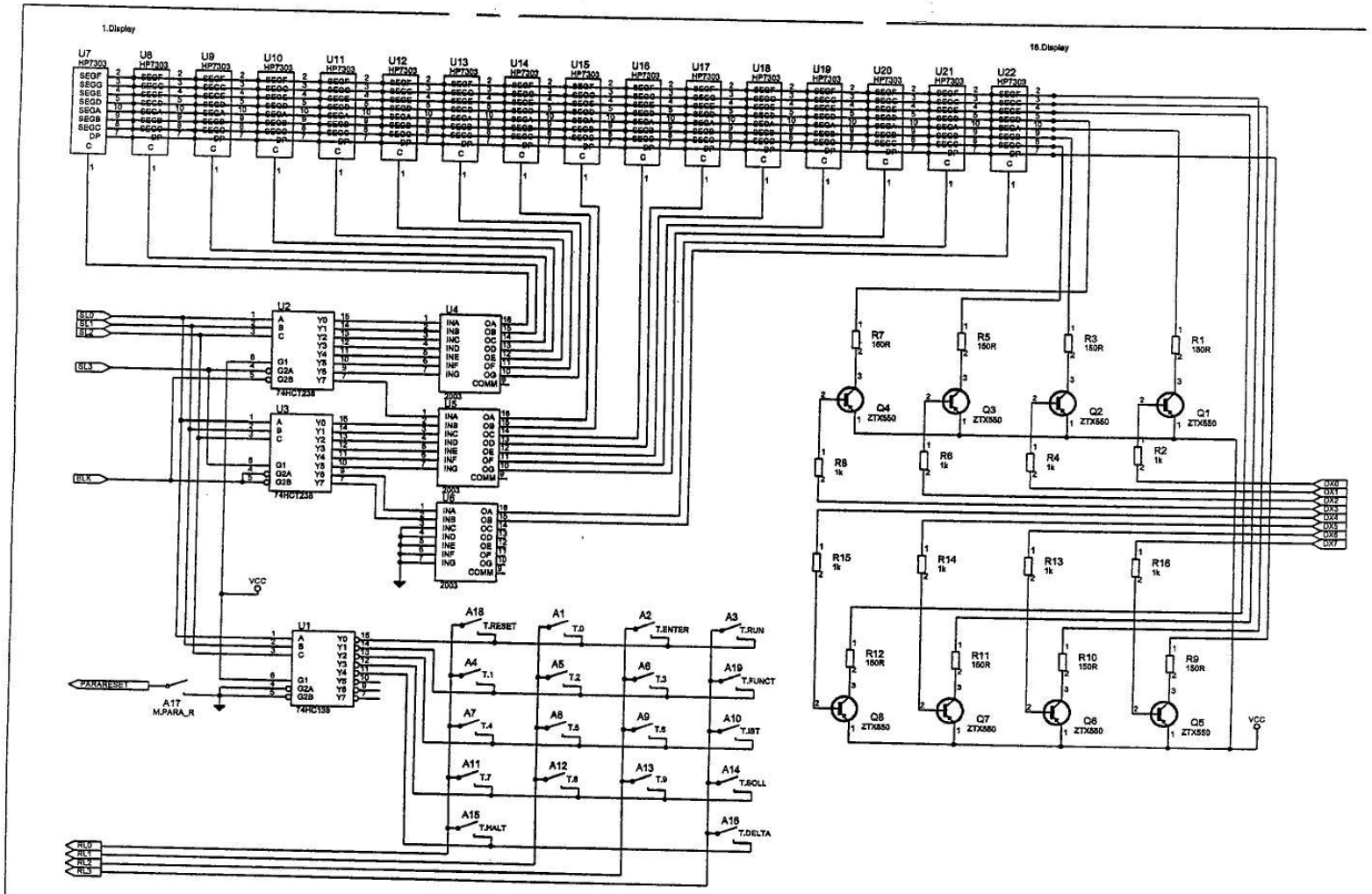

R1,R3,R5,R7,R9..R12 27R --> 150R

ATV TECHNOLOGIE		
Size B	Document Number PEO 602 ANZEIGE UND TASTEN	REV B/D
Date: October 14, 1999	Sheet 2 of 6	

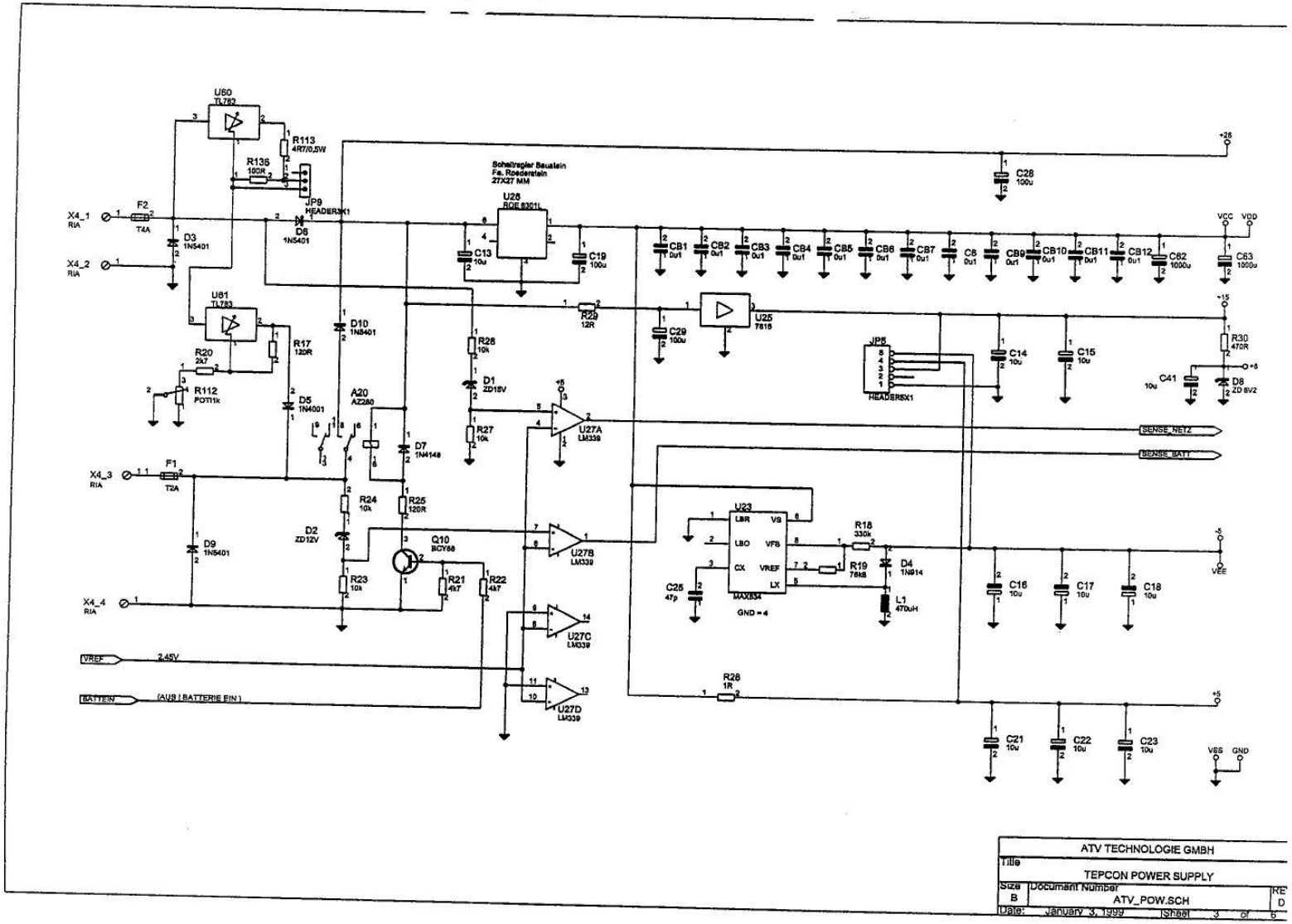

	ATV TECHNOLOGIE GMBH
Title	TEPCON POWER SUPPLY
Size B	Document Number ATV_POW.SCH
Date: January 3, 1999	Sheet 3 of 6

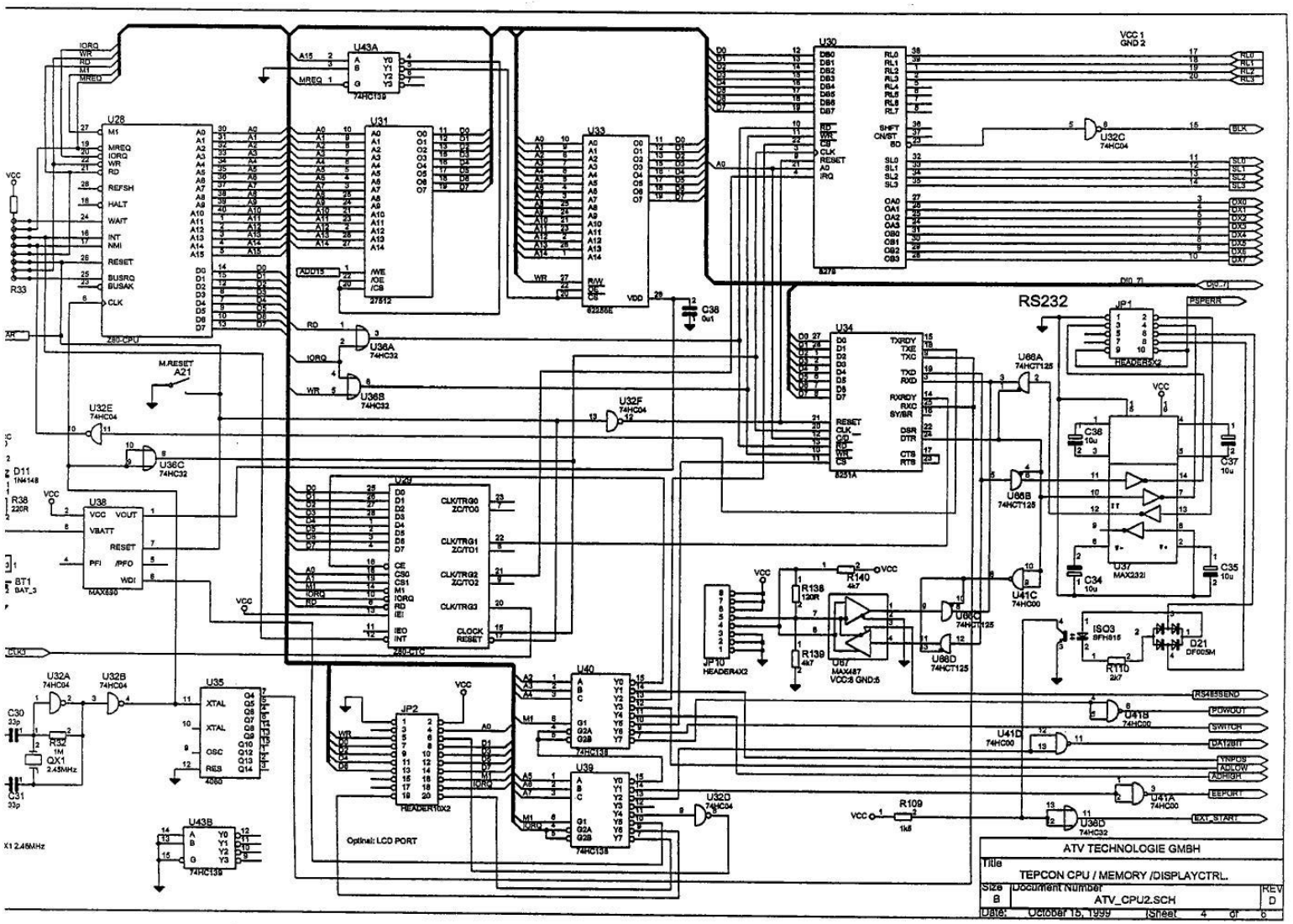
ATV TECHNOLOGIE GMBH
Title
TEPCON CPU / MEMORY /DISPLAYCTRL.
Size
B
Document Number
ATV_CPU2.SCH
REV
D
Date: October 15, 1999
Sheet 4 of 6
RS232
Optinal: LCD PORT
U28
Z80-CPU
U29
Z80-CTC
U30
8278
U31
27512
U33
62256E
U34
8251A
U35
4060
U37
MAX232I
U38
MAX690
U40
74HC138
U39
74HC138
U43A
74HC139
U43B
74HC139
U32A
74HC04
U32B
74HC04
U32C
74HC04
U32D
74HC04
U32E
74HC04
U32F
74HC04
U36A
74HC32
U36B
74HC32
U36C
74HC32
U36D
74HC32
U41A
74HC00
U41B
74HC00
U41C
74HC00
U41D
74HC00
U66A
74HC125
U66B
74HC125
U66C
74HC125
U66D
74HC125
U67
MAX487
VCC:8 GND:5
JP1
HEADER4X2
JP2
HEADER10X2
JP10
HEADER4X2
ISO3
6FH615
D21
DF005M
D11
1N4148
BT1
BAT_3
QX1
2.45MHz
X1 2.45MHz
M.RESET
A21
RS485SEND
POWOUT
SWITCH
DA12BIT
YNPCS
ADLOW
ADHIGH
EEPORT
EXT_START
PSPERR
DI0..7
DO0..7
CLK0
VCC 1
GND 2

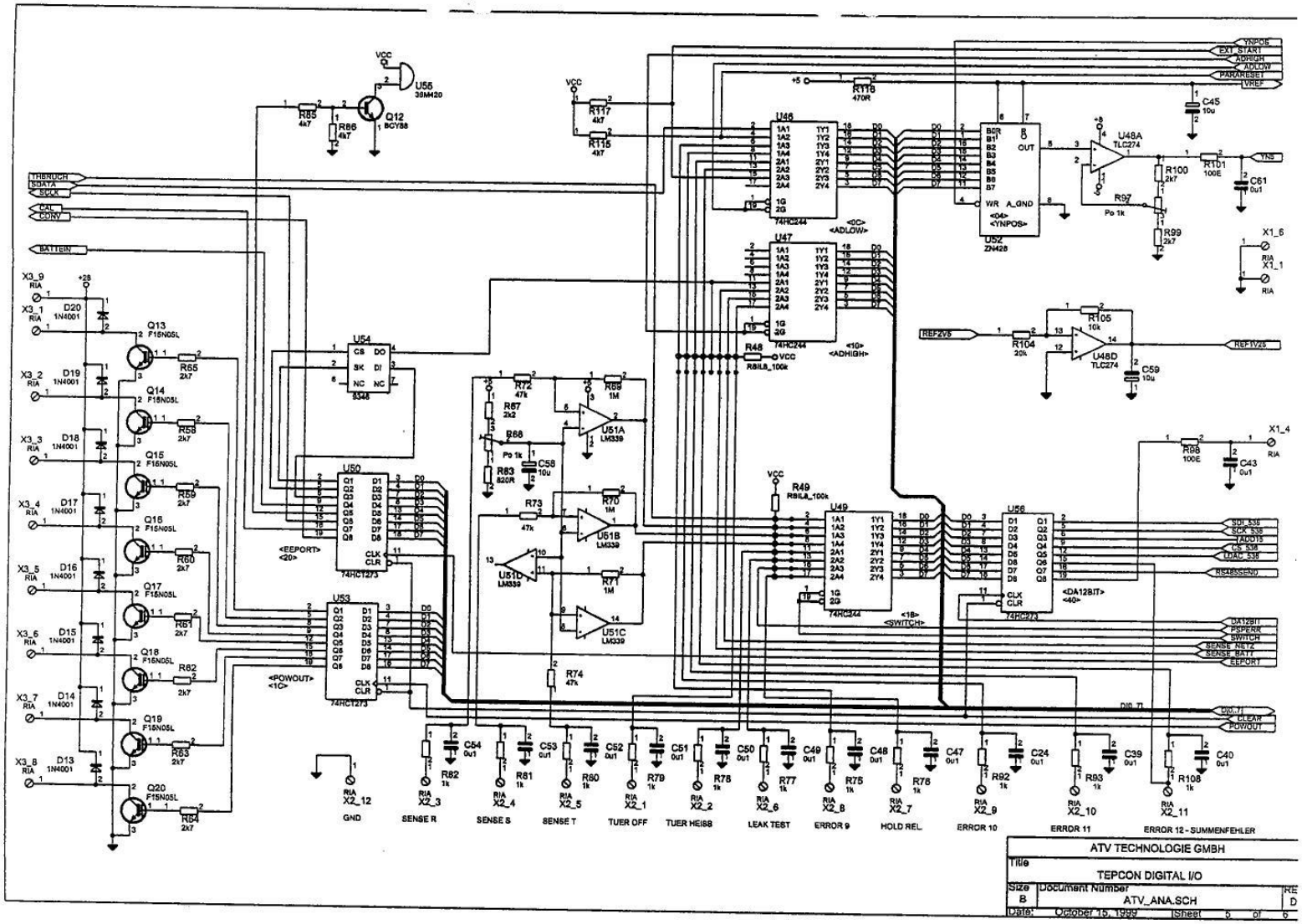
ATV TECHNOLOGIE GMBH
Title
TEPCON DIGITAL I/O
Size B
Document Number ATV_ANA.SCH
Date: October 15, 1999
Sheet 5 of 5
GND
SENSE R
SENSE S
SENSE T
TUER OFF
TUER HEISS
LEAK TEST
ERROR 9
HOLD REL.
ERROR 10
ERROR 11
ERROR 12 - SUMMENFEHLER

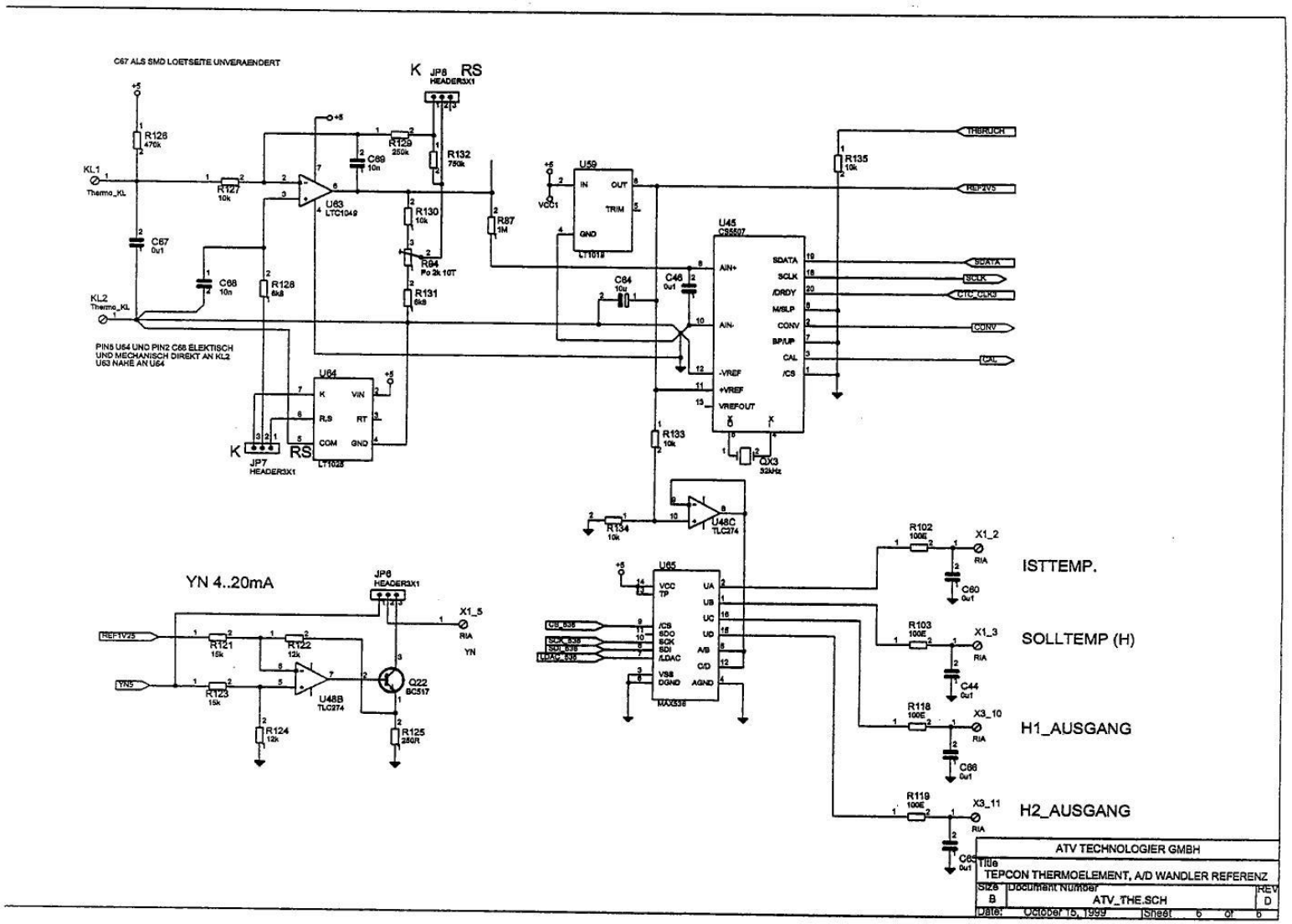
C67 ALS SMD LOETSEITE UNVERAENDERT
PIN5 U64 UND PIN2 C68 ELEKTISCH UND MECHANISCH DIREKT AN KL2
U63 NAHE AN U64
YN 4..20mA
ISTTEMP.
SOLLTEMP (H)
H1_AUSGANG
H2_AUSGANG
ATV TECHNOLOGIER GMBH
TEPCON THERMOELEMENT, A/D WANDLER REFERENZ
ATV_THE.SCH
October 15, 1999

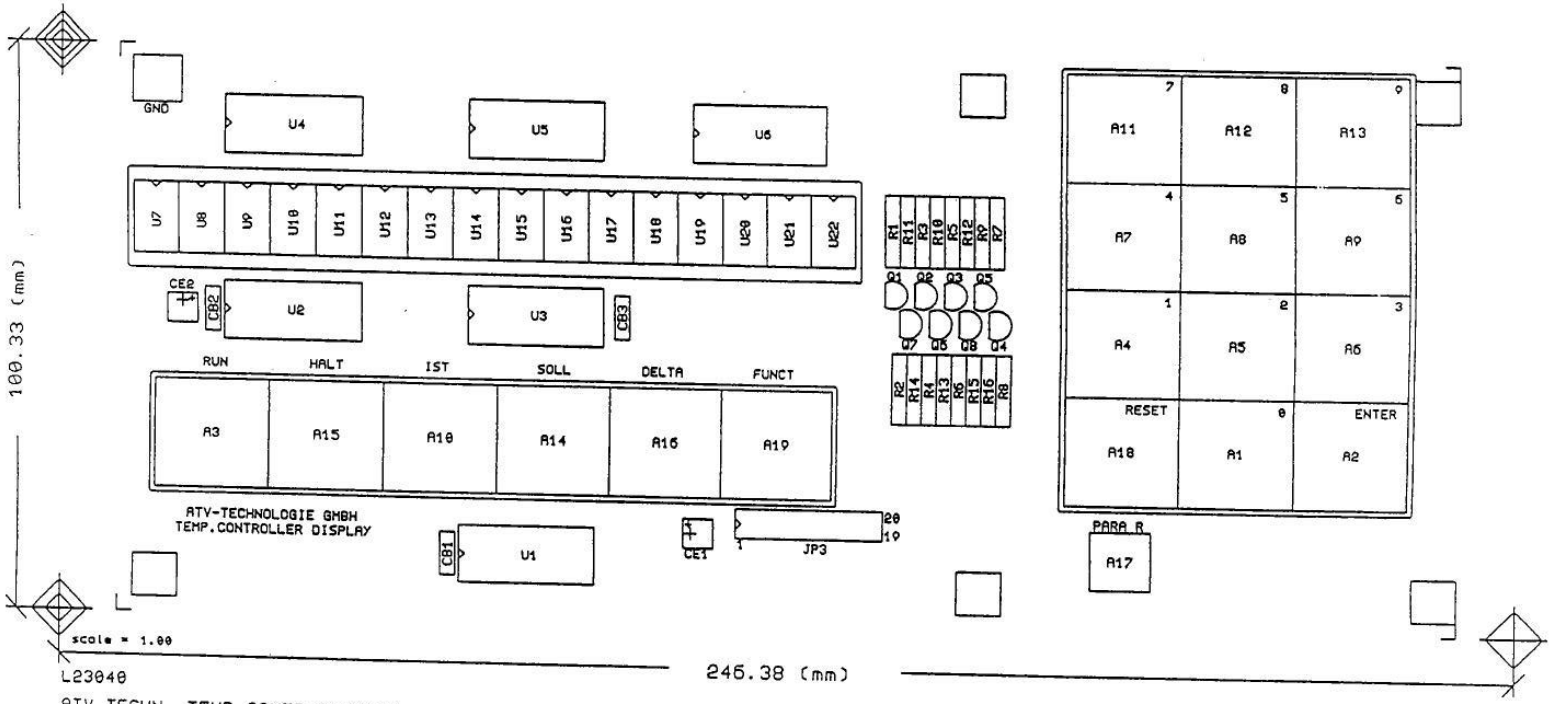

L23040

ATV TECHN. TEMP.CONTR.DISPLAY

20-Aug-92 BPL=1 SEG=E

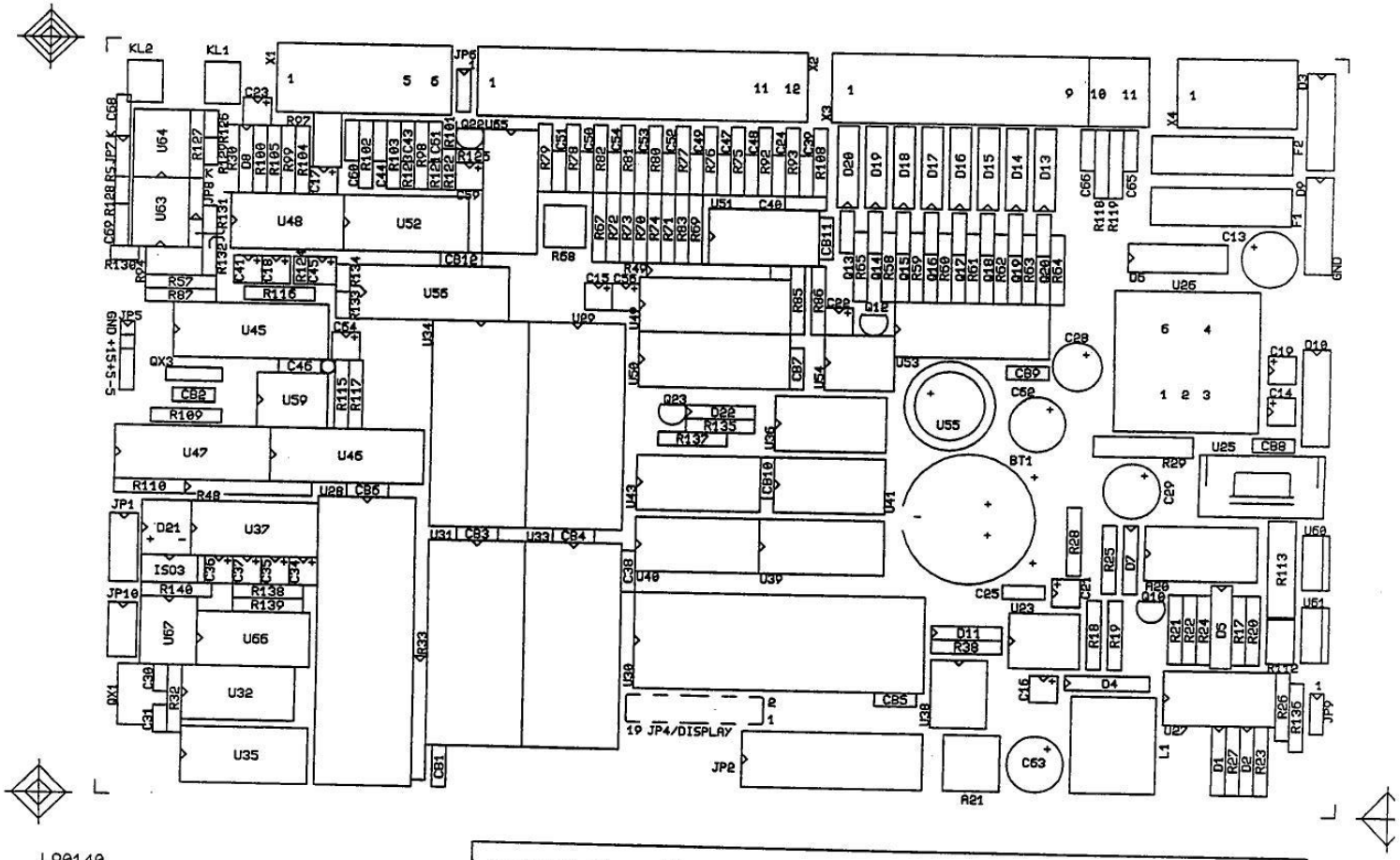

L90140
ATV-TECHN. TEMP.CONTR.CPU V3.0
15-Jan-99 BPL=1 SEG=E

7842

ACHTUNG: Dieser Film nur f. DOKUMENTATION nicht f. LP-Fertigung geeignet !!!!

Power Controller 2x 16A/230VAC

with analog input 0-5VDC

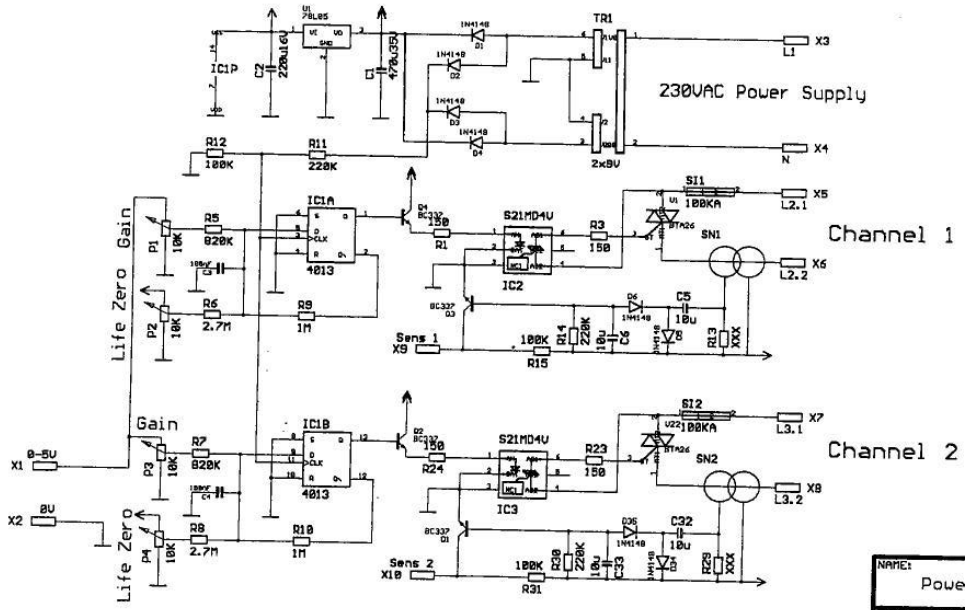

R13,R29 560-1000 Ohm, depending on modell

NAME: Power Controller		
DRAWING NUMBER: ITEAW.sch		DATE: 26/4/2000
SERIAL NUMBER:	TYP:	ATV TECHNOLOGIE GMBH AM KIESGRUND 2-4 85622 FELDKIRCHEN GERMANY TEL. (089) 9 03 00 58
DESIGNED BY: ASp	APPROVED BY:	

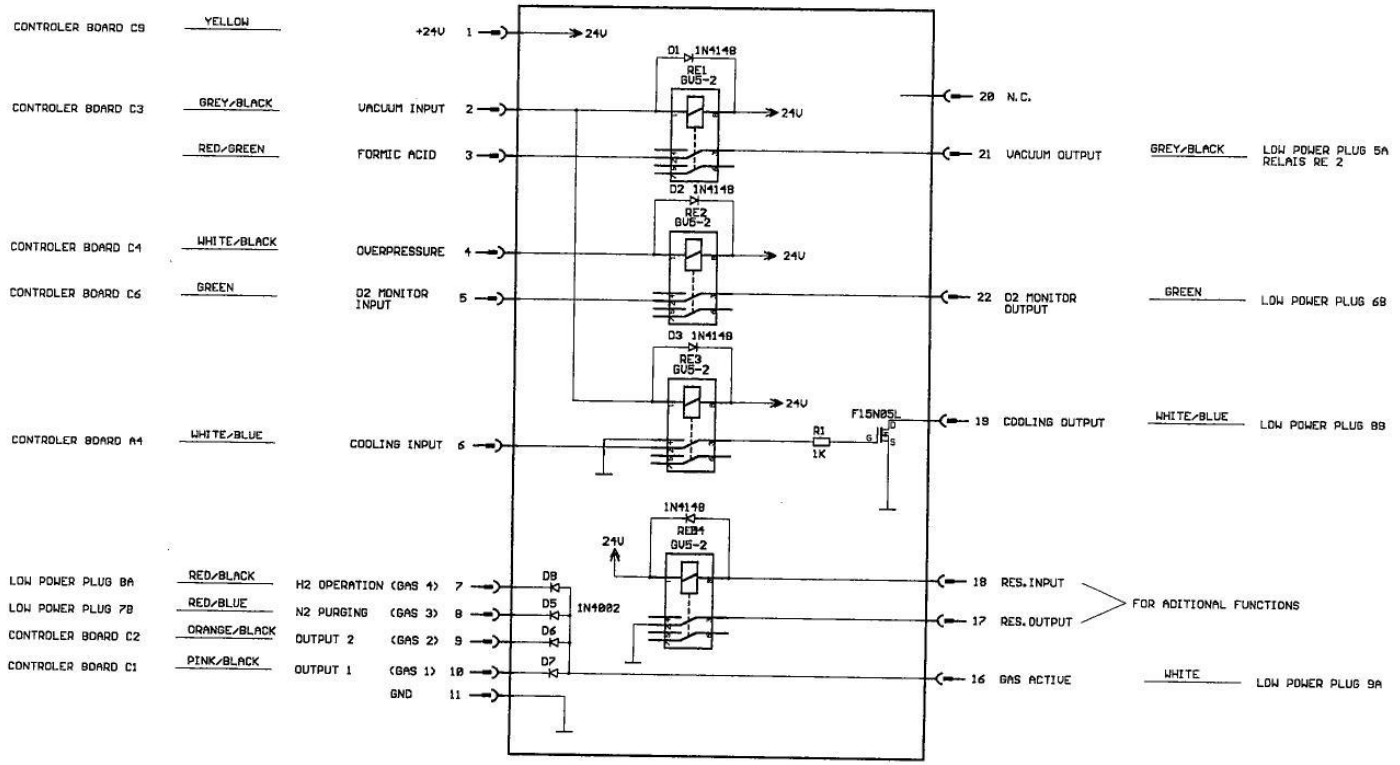

NAME: RELAIS BOARD			
DRAWING NUMBER: 900210		DATE: 01.07.1999	
SERIAL NUMBER:	TYP: SRD 702 SRD 704	ATV TECHNOLOGIE GMBH AM KIESGRUND 2-4 85622 FELDKIRCHEN GERMANY TEL. (089) 9 03 00 58	
DESIGNED BY: ME	APPROVED BY:		

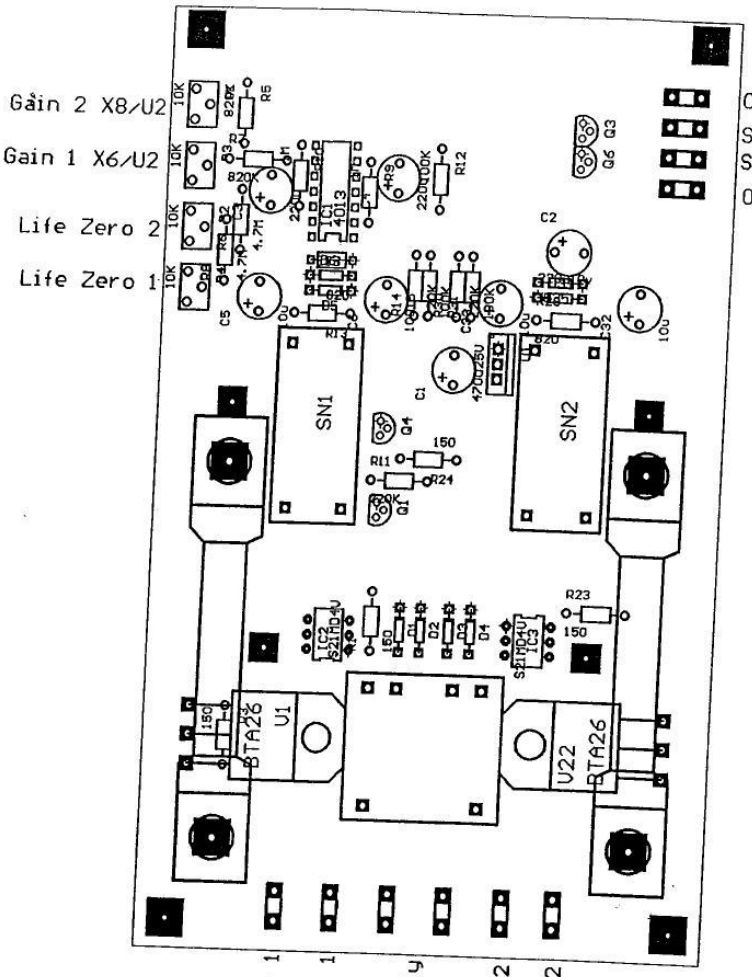

Letzte durchgeführte Änderung:

Änd Zust.	Änderungs-Mitteilung	Tag	Name

Allgemein Toleranz

Maßstab 1:1

1 x pro Gerät

Halbzeug, Werkstoff

	K-H	Tag	Name
Bearb.		17.97	HI

Preis/Stück Standardlos 00.00 DM

Benennung: ITEAW

Zeichn.-Nr

Blatt-Nr 1

TECHNOLOGIE GmbH
Am Kiesgrund 2-4
85622 Feldkirchen
Telefon (089)9030058
Telefax (089)9031384

SO-Projektion Methode E

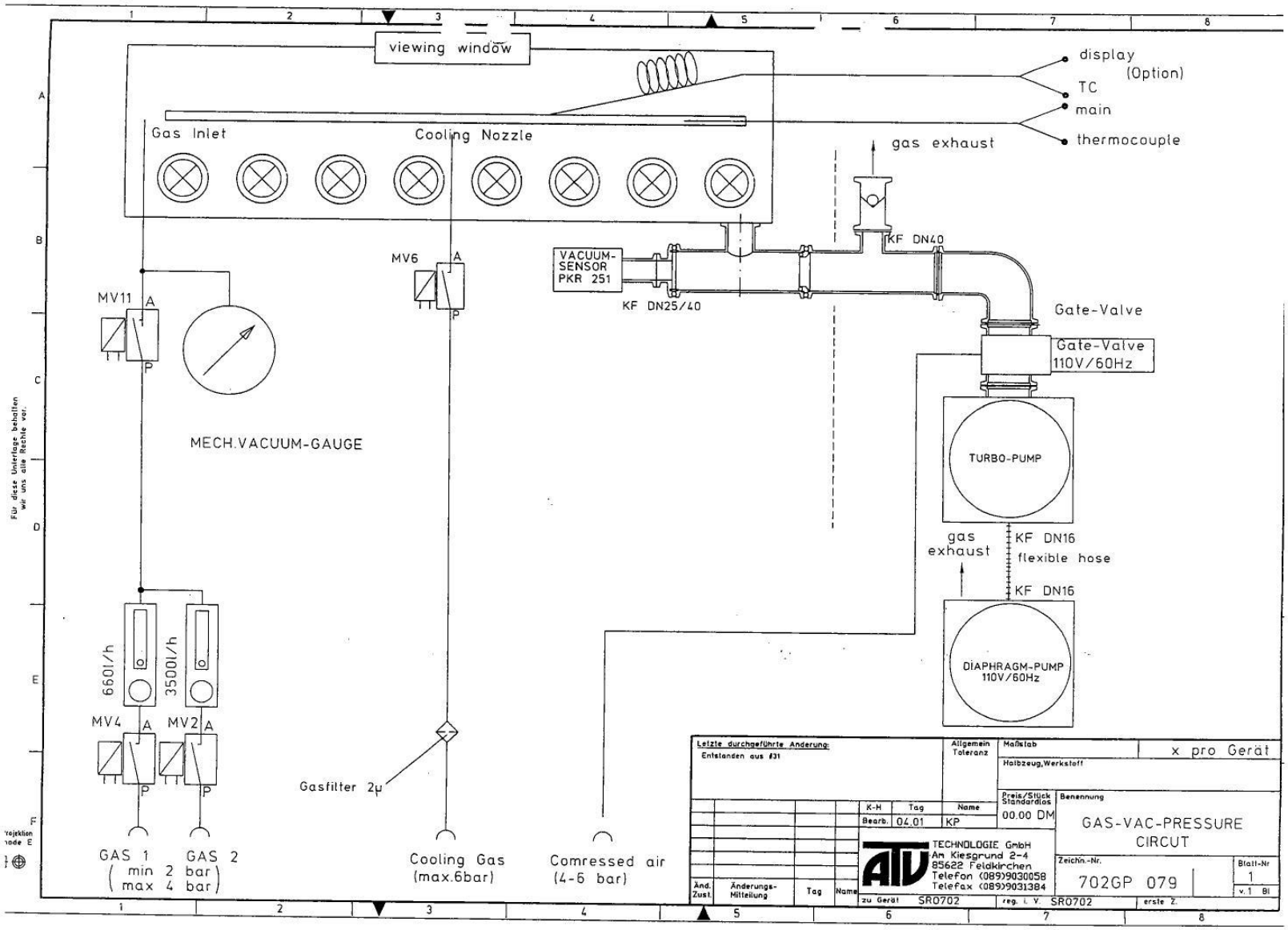
viewing window
display
(Option)
TC
main
thermocouple
Gas Inlet
Cooling Nozzle
gas exhaust
KF DN40
VACUUM-
SENSOR
PKR 251
KF DN25/40
MV6
A
P
MV11
A
P
Gate-Valve
Gate-Valve
110V/60Hz
MECH.VACUUM-GAUGE
TURBO-PUMP
gas
exhaust
KF DN16
flexible hose
KF DN16
DIAPHRAGM-PUMP
110V/60Hz
660l/h
3500l/h
MV4
MV2
Gasfilter 2µ
GAS 1
(min 2 bar)
max 4 bar)
GAS 2
Cooling Gas
(max.6bar)
Comressed air
(4-6 bar)
Letzte durchgeführte Änderung:
Entstanden aus #31
Allgemein Toleranz
Maßstab
x pro Gerät
Halbzeug,Werkstoff
Preis/Stück Standardlos
00.00 DM
Benennung
GAS-VAC-PRESSURE
CIRCUT
K-H
Tag
Name
Bearb.
04.01
KP
TECHNOLOGIE GmbH
Am Kiesgrund 2-4
85622 Feldkirchen
Telefon (089)9030058
Telefax (089)9031384
Änd. Zust.
Änderungs-Mitteilung
Tag
Name
zu Gerät
SR0702
reg. i. V.
SR0702
erste Z.
Zeichn.-Nr.
702GP 079
Blatt-Nr
1
v.1 Bl
Für diese Unterlage behalten
wir uns alle Rechte vor.

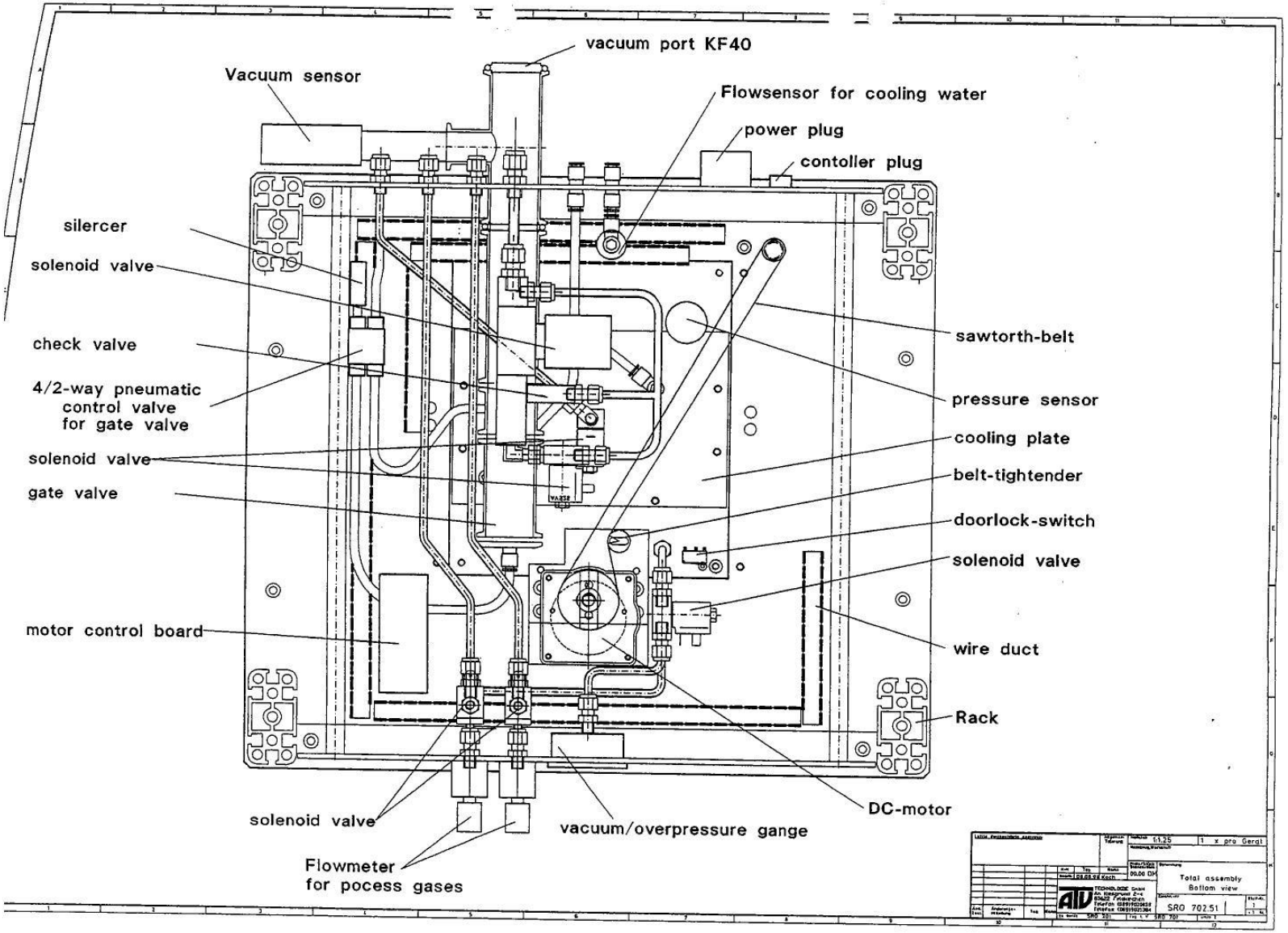
vacuum port KF40
Vacuum sensor
Flowsensor for cooling water
power plug
contoller plug
silercer
solenoid valve
check valve
4/2-way pneumatic control valve for gate valve
solenoid valve
gate valve
motor control board
sawtorth-belt
pressure sensor
cooling plate
belt-tightender
doorlock-switch
solenoid valve
wire duct
Rack
DC-motor
solenoid valve
vacuum/overpressure gange
Flowmeter for pocess gases
1:1,25
1 x pro Gerät
Total assembly
Bottom view
SRO 702.51

WATER FLOW SR0702 / SR0704

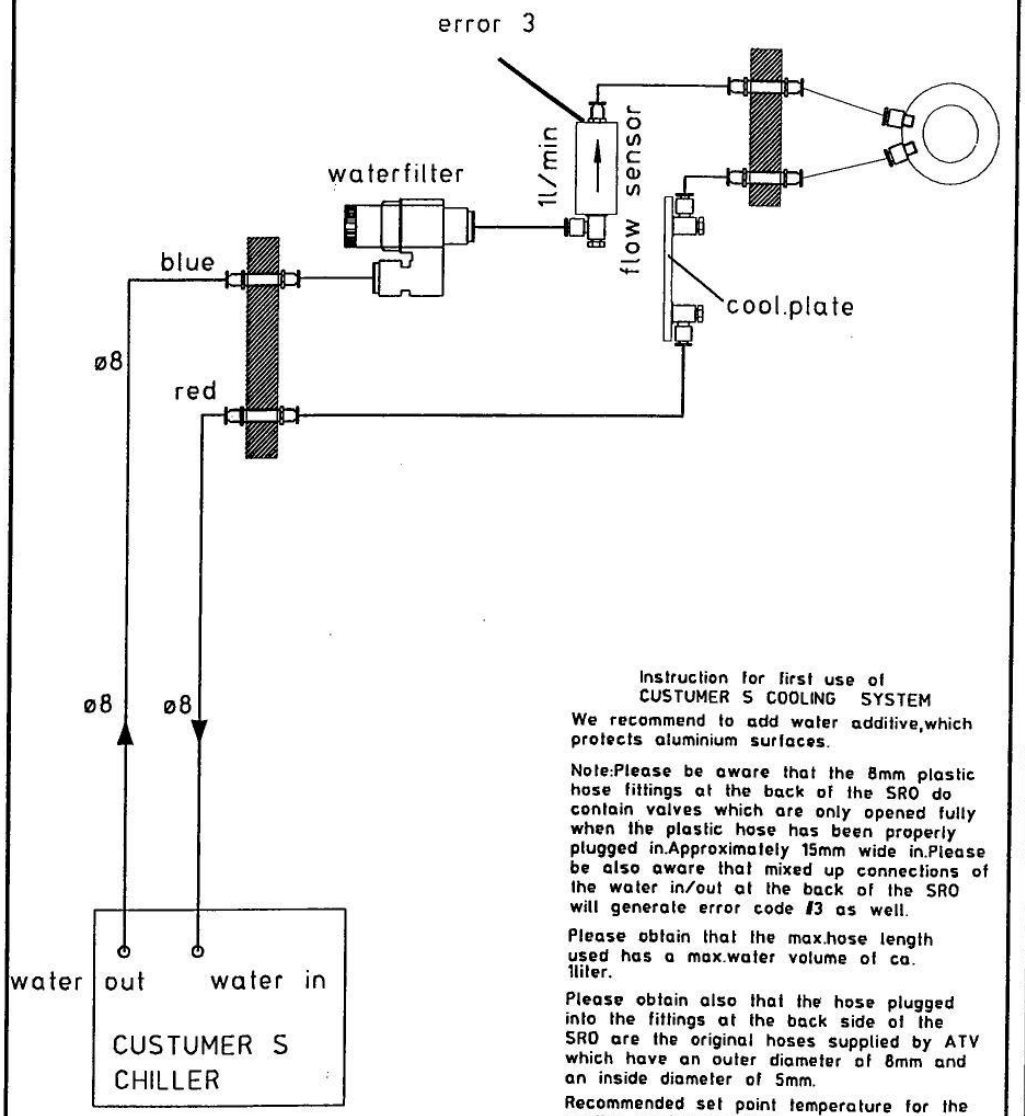

Instruction for first use of
CUSTUMER S COOLING SYSTEM

We recommend to add water additive,which protects aluminium surfaces.

Note:Please be aware that the 8mm plastic hose fittings at the back of the SRO do contain valves which are only opened fully when the plastic hose has been properly plugged in.Approximately 15mm wide in.Please be also aware that mixed up connections of the water in/out at the back of the SRO will generate error code #3 as well.

Please obtain that the max.hose length used has a max.water volume of ca. 1liter.

Please obtain also that the hose plugged into the fittings at the back side of the SRO are the original hoses supplied by ATV which have an outer diameter of 8mm and an inside diameter of 5mm.

Recommended set point temperature for the cooling system is 20°C.

Letzte durchgeführte Änderung:				Allgemein Toleranz	Maßstab	x pro Gerät	
					Halbzeug,Werkstoff		
				K-H	Tag	Name	Preis/Stück Standardlos: 00.00 DM
				Bearb.	04.10.99	KP	Benennung: Cooling water flow Sr.nr.: Vorlage
Änd. Zust.	Änderungs-Mitteilung	Tag	Name	ATV TECHNOLOGIE GmbH, Am Kiesgrund 2-4, 85622 Feldkirchen, Telefon (089)9030058, Telefax (089)9031384			Zeichn.-Nr.: 70X KW 000
				zu Gerät: SRO 702	reg. i. V.: SRO 702	erste Z.	Blatt-Nr.: 1 v.1 Bl.

ISO-Projektion Methode E

Do not open during operation!

SRO 704

Outputs	Functions
1	Flowmeter 1
2	Flowmeter 2
3	Vacuum
4	-
5	-
6	max.cooling
7	-

ERROR

1 Thermocouple broken
Max. heating timeout
2 Chamberdoor open
3 Waterflow missing
4 Software error
5 Chamber overheat
6 IR-lamps error
7 IR-lamps error
8 -

ATV TECHNOLOGIE GmbH
Am Kiesgrund 2-4
85622 Feldkirchen
Telefon (089)9030058
Telefax (089)9031384

Ser.Nr. 079

CE

Year: 2001
Made in Germany

Type SRO 702

Supply voltage	120/208V
Phase	3 P
Frequency	60 Hz
Full-load current	25 A
Number of wires	4 + Gnd
Cos φ	0.98
Ampere rating of largest motor or load	8 KW
Short circuit interrupting capacity	6 KA

Main Display

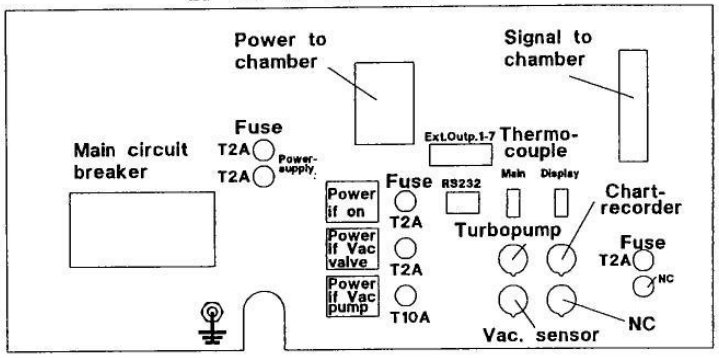

Compr. air 4-6 bar

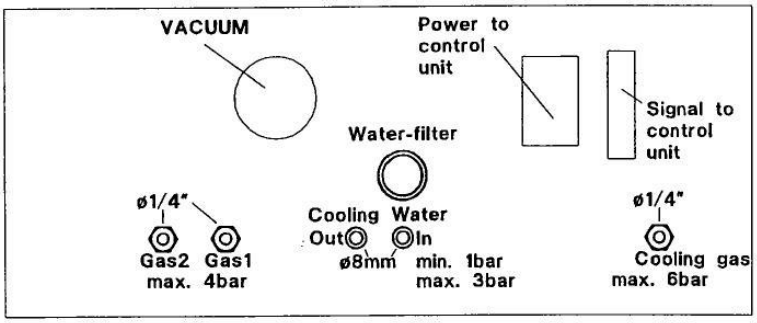

120V T2A

120V T2A

120V T10A

Flow 1	Flow 2
660 l/h	3500 l/h

unlocked

locked

Letzte durchgeführte Änderung:

Änd. Zust.	Änderungs-Mitteilung	Tag	Name

Allgemein Toleranz

Maßstab 1:1

1 x pro Gerät

Halbzeug, Werkstoff

Preis/Stück Standardlos 00.00 DM

	K-H	Tag	Name
Bearb.		21.05.01	Koch

Benennung: USA-SRO Installation-layout

ATV TECHNOLOGIE GmbH
Am Kiesgrund 2-4
85622 Feldkirchen
Telefon (089)9030058
Telefax (089)9031384

Zeichn.-Nr. 702 La 079

Blatt-Nr. 1 v. 1 Bl.

zu Gerät SRO 702 | reg. i. V. SRO 702 | erste Z.

ISO-Projektion Methode E

ATV TECHNOLOGIE GMBH
Entwicklung und Vertrieb von Maschinen und Geräten für die Mikro-Elektronik
Technologieberatung
Telefon: +49 (0)89 - 9 03 00 58 / Fax: +49 (0)89 - 9 03 13 84

Konformitätserklärung
Declaration of Conformity

Wir ***We***	**ATV Technologie GmbH** **Geräte für die Mikroelektronik**
Anschrift ***Address***	**Am Kiesgrund 2-4** **D-Feldkirchen** **Germany**

erklären in alleiniger Verantwortung, daß das Produkt:
declare under our sole responsibility, that the product:

Bezeichnung ***Name***	**Lötofen** ***Solder Reflow Oven***
Typ, Modell, Artikel-Nr.: ***Type, model, article No.:***	**SRO Serie** ***SRO Series***

mit den Anforderungen der folgenden europäischen Normen
fulfills the requirements of the following european standards

Richtlinie/*Rule*	**EWG No.**
EMV-Richtlinie	**89/336 EWG**
Niederspannungsrichtlinie	**72/23 EWG**

sowie folgenden harmonisierte Europäische Normen/*harmonized european standards/*

Referenznummer	**Ausgabedatum**	
EN 50081-2	**1993-08**	**Störemission**
EN 50082-2	**1995-03**	**Störfestigkeit**

sowie folgenden nationalen Normen/*national standards*

und mit den Prüfberichten überstimmt und damit den Bestimmungen entspricht.
and the taken test reports and therefore corresponds to the regulations of the Directive.

Prüfberichtnummer (*test report No.)* **Prüfberichtnr. 473**	**Ausgabedatum *(Date of Issue)*** **17. September 1997**
Feldkirchen, July 1999	**Dipl. Phys. Stefan Himmelsbach,** **Astrid Schmid**
Ort und Datum der Ausstellung ***Place and Date of Issue***	**Name und Unterschrift der Befugten** ***Name and Signature of authorized persons***

Diese Erklärung entspricht EN 45 014 (März 1998)
This Declaration corresponds to EN 45014

ILMVAC

ILMVAC®

Operation Manual

Diaphragm pumps (4-headed)

Types **MP 301 V / MP 601 T / MP 901 Z / MP 1201 E**
MPC 301 V / MPC 601 T / MPC 901 Z / MPC 1201 E

ILMVAC

We are constantly working on the further development of all our product types.

We reserve the right to make changes and amendments.

ILMVAC GmbH
Am Vogelherd 20
98693 Ilmenau, Germany

Telephone: +49 36 77 60 40
Fax: +49 36 77 60 41 10
E-mail: info@ilmvac.de
Homepage: http://www.ilmvac.de
http://www.ilmvac.com

ILMVAC

Contents

1 Key symbols

Warning!

These are especially important notes and warnings to protect health and safety and prevent accidents.

Attention!

These are important notes and warnings to prevent technical damage or breakdowns during use etc.

Environment!

These are important notes for the protection of the environment.

2 General safety notes

- Please read these Operation Manual carefully before commissioning the **ILMVAC® diaphragm pumps** and follow it in every particular. Our **ILMVAC® diaphragm pumps** are absolutely safe in use for the user and the immediate environment as long as they are used according to the instruction. It is the responsibility of the user to observe the safety precautions as described in the Operation Manual.
- The valid accident prevention laws for compressors must be regarded as applicable to the **ILMVAC® diaphragm pumps** and be observed especially in respect of *installation* and *operation* of such systems.
- To provide power for the **ILMVAC® diaphragm pumps** use only an electricity supply that has a perfect earth (see DE - rules for German electrical engineers) and an undamaged connecting lead. If a connecting cable is damaged it must be disconnected from the electricity supply immediately and replaced by qualified staff. Take care to ensure adequate heat removal at the place of installation (IEC 1010).
- **ILMVAC® diaphragm pumps** may not be used to evacuate vessels in witch there are live animals.
- The pipe on the pressure side should be installed sloping downward to avoid back- flow of condensate into the pump.
- Standard **ILMVAC® diaphragm pumps** as described in this Operation Manual are not explosion-proofed. It is the responsibility of the operator to decide as to when explosion proof is required. Please see also chapter 5.4.
- You must without fail ensure that dangerous substances do not escape from the pump circuit by accident or lack of attention.
- Take care that the **ILMVAC® diaphragm pump** is correctly connected to the vacuum - or the pressure system, whichever is appropriate. Pump and vacuum apparatus should be connected by suitable flexibles or hoses.
- Please avoid any dust or solid particles form entering the pump. Dust as well as other dangerous and harmful components can be filtered out in appropriate separators or traps.
- Depending on the function they are performing, the **ILMVAC® diaphragm pumps** may develop temperatures at the pump-heads between 60 and 70° C, according to ambient temperature and the volume being pumped (IEC-1010). In case of danger of unintentional contact, a guard must be provided to protect the user.
- If the **ILMVAC® diaphragm pump** is operated as a compressor the pressure on the exhaust side, during the starting and running-up periods must not exceed the atmosphere pressure. Otherwise the pump may fail to start. This may cause overheating resp. failure of the motor.

- Special units can be delivered according to customer's specification.
- Also on special request all diaphragm pumps are available with explosions proofed motors.

Based on the a.m. properties and possibilities the pumps have a wide application spectrum in industry as well as in chemical and physical laboratories.

3.3 Function

The electric motor transfers via eccentric shaft and two connecting rods a reciprocating movement to the diaphragm.

Due to the reciprocating motion of the diaphragm in the pump head from the lower to the upper dead point and vice versa, the volume of the compression chamber will be expanded or reduced depending on the position of the diaphragm. In case of the expansion of the volume of the compression chamber the inlet valve opens and the outlet valve remains closed, thus the suction process begins. In case of the reduction of the volume of the compression chamber the valve position is reciprocal and the compressed gas will be ejected through the exhaust valve. The valves are operated by the pumped media.

Depending on the connection of the pump heads (parallel or in-line connection), a single-, double-, three- or four-stage pump will result, characterised by different parameters regarding pumping speed and ultimate vacuum.

The number of stages represents the number of heads and/or head groups connected in line:

- **single stage (E):** Four pump heads are connected in parallel. The maximum possible pumping speed can be reached.
  Types MP 1201 E and **MPC 1201 E**
- **double-stage (Z):** Three pump heads are connected in parallel, the fourth in-line. This connection guarantees the a good pumping speed and an ultimate pressure of $\leq$ 8mbar.
  Types MP 901 Z and **MPC 901 Z**
- **three-stage (T):** Two pump heads are connected in parallel and the other two in-line. With this connection the pumping speed is reduced by one third compared with the double-stage version (ultimate pressure: $\leq$ 2 mbar)
  Types MP 601 T and **MPC 601 T**
- **four-stage (V):** All four pump head are connected in-line. An ultimate pressure of < 1 mbar is obtained.
  Types MP 301 V and **MPC 301 V**

3.4 Gas ballast

Pumping of condensable vapours with multistage diaphragm pumps can result in condensation of these vapours during the compression phase, if the saturation vapour pressure is exceeded.

This results in a considerable deterioration of the pump's properties:

- The ultimate pressure is not reached.
- The valves stick to the valve seat.

This a avoided by installing a gas ballast valve into the suction line of the last stage (resp. into the pressure line of the last penultimate stage).

When the gas ballast valve is opened air enters the compression chamber.

The partial pressure of the condensable vapour is reduced below the saturation pressure due to the admitted air. The outlet valve will be opened before any vapour can condense inside the pump.

A gas ballast valve is part of the standard scope of delivery of the MPC-version. If a gas ballast valve is required for applications with the MP version it is available as option.

Order-No. 400599 (please see assessors)

Attention!

When using gas ballast, the operation temperature of the pump will rise. The more ballast air admitted through the gas ballast valve, the higher (worse) the ultimate pressure.

3.5 Accessories (Options)

3.5.1 Intake valve

Using this solenoid valve, it will be possible to control the operating pressure within the connected equipment and to prevent venting of the equipment when the pump is switched off.

Order-No. 700186

3.5.2 Venting valve

This solenoid valve will be used for venting the equipment.

Order-No. 700187

3.5.3 Gas ballast valve for MP (Standard version)

In order to reduce condensation during pumping of condensable vapours, this manually-operated gas ballast valve can be used.

Order-No. 400599

3.5.4 Vacuum controller VCZ 224

We recommend the **VCZ 224** vacuum controller for vacuum measurements from 1 to 1400 mbar, and for control and regulation purposes.

In accordance with the required connection conditions, a **VVB G** control valve also has to be ordered.

Order-No. 600034 Vacuum controller VCZ 224

Order-No. 700301 Control valve VVB G

4 Technical data

4.1 Illustration and dimensions

4.1.1 Connecting elements

(suction and pressure side) for all standard types:

Suction nozzle and pressure nozzle: Hose nozzle DN8 for laboratory hose NW 8 (special dimensions on request e.g. DN 16 KF)

4.1.2 Illustration and dimensions

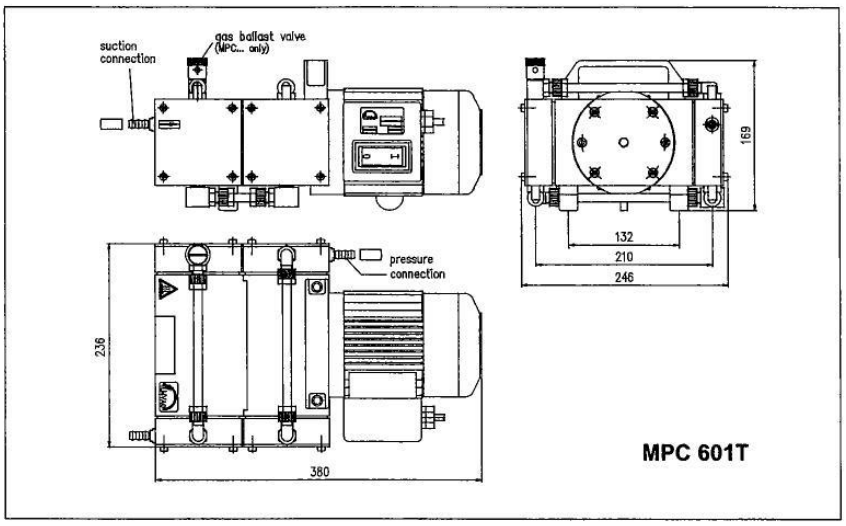

4.2 Pump data

4.2.1 Electrical data

	Voltage	Frequency	Motor type Pump motor	Power consumption	Operation mode	System of protection
Applies to all pumps	V	Hz		kW		
	230 *	50 - 60 *	single phase incl. oper. condens.*	0.37	S 1	IP 54
	230/ 400 *	50 - 60*	three-phase*	0.37	S 1	IP 54
	* other voltage and frequencies on request					

4.2.2 Performance data

Type	Pumping speed		Ultimate pressure	Ultimate pressure (with gas ballast)	Over pres-sure	Weight	Order-No.
	m^3/h	l/min	mbar	mbar	bar*	kg	
MP 301 V	2.3	38	< 1	-	2	12.5	4000721
MPC 301 V							4001021
MP 601 T	4.5	75	≤ 2	-	2	12.5	4000311
MPC 601 T				9			4000511
MP 901 Z	6.8	113	≤ 8	-	2	12.5	4000321
MPC 901 Z				18			4000521
MP 1201 E	8.3	138	≤ 75	-	2	12.5	4000391
MPC 1201 E				90			4000531

4.3 Intake pressure

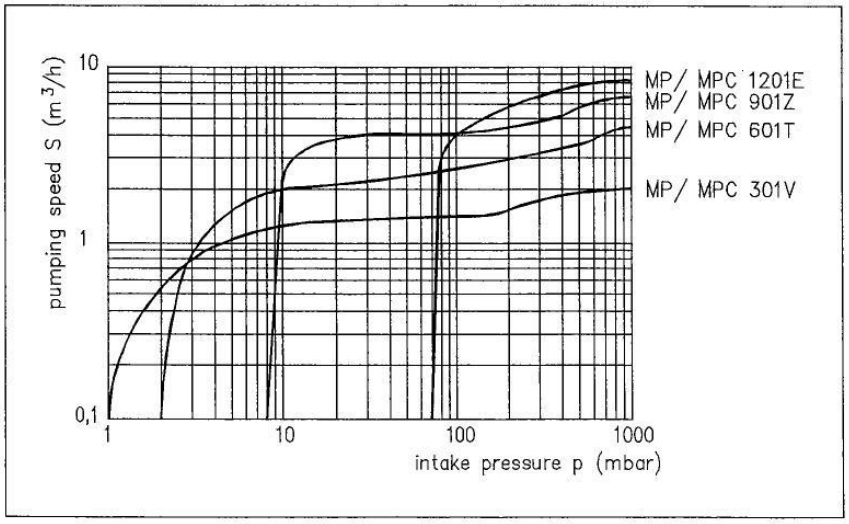

5 Assembly and installation

5.1 Unpacking

After receipt, the **ILMVAC® diaphragm pumps** have to be unpacked carefully. Afterwards, the delivery should be checked for completeness, correct type, correct electrical values and possible transport damage.

Environment!

Only then the packaging material should be disposed of with due consideration for the environment!

In case of damage, please contact Messrs. ILMVAC GmbH.

5.2 Storage

Storage has to be realised in dry and adequately heated rooms (ambient temperature 5 °C to 40 °C).

The caps to remain (resp. shall be re-fitted) on the suction resp. pressure nozzles. Otherwise, both nozzles have to be equally protected, applying other means and methods.

5.3 Connecting the diaphragm pump

After the caps of the hose nipples have been removed, either the suction nozzle (operation as vacuum pump) or the pressure nozzle (operation as compressor) have to be connected with the equipment via the connecting elements (see section 4.1).

The connections as well as the equipment have to be checked for tightness!

Considering possible condensation, the pipeline on the pressure side has to be arranged sloping downward.

Attention!

Furthermore, it has to be checked that the suction resp. pressure nozzles are connected correctly.

5.4 Connecting to electricity supply

The standard pumps are completely electrically wired-up. The connection to the mains is by an appliance cord. The motor terminal box contains an on-off switch. All the one-stage pumps have a cut-out switch installed to protect the motor.

Warning!

If the user wishes to change the electrical connection (e. g. for the purpose of installing it in a plant), a specialist should carry-out this work. The regulations for prevention of accidents, using „electrical installations and apparatuses" VBG4 have to be observed.

Attention!

Diaphragm pumps with three phase motors are supplied without motor protection switch but with on-/ off switch. The user has to provide the required protective measures.

Attention!

If special versions with explosion-proofed motor are used the user hat to decide whether external measures for the explosion protection of the pum are necessary. The user is responsible for the application of the prevailing safety rules!

6 Operation

Due to the simplicity and raggedness for our products there are no extensive regulations for operation required when being used expertly. However the directions listed below should be observed:

- In general a diaphragm pump (MPC...) must be used for the pumping of aggressive media.

Attention!

A direct suction of liquids by the pumps has to be avoided.

Environment!

An unnoticed escape (or an escape by mistake) of the pumped medium (tightness, operation) has to be avoided in any case. This is especially necessary, if aggressive gases which are harmful to health and environment are being pumped, or if such gases and vapours are exhausted.

- If dust as well as aggressive gases and vapours, being harmful to health and environment, are contained in the delivered medium, they can be retained by suitable separators on the suction side as well as on the pressure side. This results in longer lifetimes of the pumps. Furthermore, health as well as environment are not endangered.
- If the chamber, resp. the equipment shall remain under vacuum after the pump has been stopped, an isolating valve has to be in installed into the suction pipeline between the pump and the chamber.
- Ensure sufficient cooling of the pump!
- The ambient temperature should be in range between 5 °C and 40 °C.
- Never operate the pump on an inclined surface! Otherwise, the pump may move, due to the vibrations.
- We recommend to pump condensable vapours with open gas ballast valve, the pump at operating temperatures and within the water vapour tolerance only.
- If the pump is operated with gas ballast, the operating temperature of the pump will rise and depending on the delivered amount of air, the final pressure will rise (resp. will deteriorate).
- After completion of your application or process please run the pump for a while with low air throughput in order to clean the valves (removal of condensate).

7 Maintenance

The following important service notes have to be observed:

At regular intervals depending on the kind of handled gases the pump has to be maintained. This includes a visual inspection of all pump parts in contact with the pumped gases/ vapours and the thorough cleaning of the diaphragm, the pump head and the valves.

Warning!

For repair or maintenance work at the diaphragm pump, when persons can be harmed by moving or electrical live parts, the main plug to be removed from the socket, or the main contacted has to be switched off and secured against reconnection to the mains.

Warning!

If harmful media (toxic, aggressive, radioactive) were pumped, the following applies:
If the operator carries out repair or maintenance work be himself, he has to take the necessary protective and disposal measures.

If the diaphragm pump is returned to the service department of the maker or a company acting on behalf of the maker, the attached damage report has to be duly completed with all details. This also applies, in none of the a.m. media has been pumped.

Attention!

Repair of the pump is carried-out only, when damage report has been duly completed.

The O-rings used in the diaphragm pumps are made of EPM. Other materials are available on request.

Maintenance

7.1 Cleaning and change of diaphragm

7.1.1 Required tools:

Tool set
Order No.: 402100

- Crosstip screwdriver, size 3
- Allan key, SW 4
- Open ended spanner, SW 17

7.1.2 Working sequence

- The open ended spanner SW 17 is used for opening the clamping ring connection.
- The Allen screws of the pump heads are unscrewed and removed by using the Allan key SW 5.
- After lifting of the cylinder- and pump head the valves and diaphragm are visible. Those have to be cleaned with a soft lentfree cloth and a suitable solvent, to be checked for damages and exchanged if necessary.
- The diaphragm is removed by anticlock wise turning using the adjustable pin type face wrench size 3.
- Assembly is performed in the reverse order.
  - Screw on pressure washer with membrane with the tensioning disc
  - Connecting rod in middle position
  - Mount pump head
  - Mount valve (full surface mounting - on ridge not to the sealing surface) and sealing ring
  - Mount Cylinder head and align fixing drill hole with pin
  - Mount at MPC pressure plate
  - Screw on with 4 internal hexagonal screws uniformly (Do not screw tight - torque max. 10 Nm)
  - Re-fit piping with clamping ring screws
  - Check function

Attention!

⚠

Each diaphragm must be removed and inserted in a horizontal position.

8 Trouble shooting

During the warranty period, interventions on pump resp. accessories shall only be made by **Fa. ILMVAC GmbH**.

Trouble	Reason	Action
Diaphragm pump does not start	No electricity, fuse defect	Electrical connection to be checked by a qualified electrician (e. g. mains cable, circuit breaker etc.)
	Motor defect	Exchange of motor by service department
	Mechanical part(s)	Exchange or repair resp. by service dept.
	Pump is under vacuum on a larger chamber	Vent suction side of the pump; if necessary, isolate chamber by a valve, to prevent venting
Pump does not generate vacuum or generates insufficient vacuum	Connected system leaky Connecting flexibles and/ or flexibles leaky.	Detect leak with leak detector or over pressure method, cure leak, of necessary exchange flexible hoses and gaskets
	Pump leaky (pipe work or flexible hoses resp.)	Check hose connections also between pump heads; if necessary exchange flexible hoses and gaskets Check hose valve
	Diaphragm pump - pump heads leaky	Repair by service department or exchange through user
	Diaphragm damaged	Repair by service department (may also be replaced by user)
	Valves contaminated	Clean valves, remove condensates and impurities
	Valves damaged	Replace valves
	ump dirty or contaminated	Repair by service department Repair by user under consideration or chapter 5.2 Maintenance

9 Overview of spare parts

The spare parts list contains all spare parts with the required order details.

Please state description, quantity and order-no. when ordering.

9.1 Maintenance kit

Description	Order No. for:			
	301 V	601 T	901 Z	1201 E
Maintenance kit MP...	400147V	400147T	400147Z	400147E
Maintenance kit MPC...	400148V	400148T	400148Z	400148E

The maintenance kit consists of:

Description	MP/ MPC-type	Pcs. x Order- No.	
		MP...	MPC...
O-ring 28 x 2		8 x 829252-2	8 x 829252-2
O-ring 12 x 2	301 V 601 T 901 Z 1201 E	2 x 829217-3 6 x 829217-3 16 x 829217-3 14 x 829217-3	4 x 829217-3 7 x 829217-3 15 x 829217-3 16 x 829217-3
Valve		8 x 400656	8 x 400656
Diaphragm		4 x 400732	4 x 400732

Overview of spare parts

part list explosion diaphragm pump:

Item-No.	Description	Order-No.	
		MP...	MPC...
1	Motor, complete	826390-1	826390-1
2	Housing 1	400640-1	400640-1
3	Eccentric shaft	400742-1	400742-1
4	Deep groove ball bearing 6205	824961-5	824961-5
5	Connecting rod	400647	400647
6	Adjusting washer 25 x 35 x 1	824957-1	824957-1
7	Housing 2	400640-3	400640-3
8	Deep groove ball bearing 6303	824949-3	824949-3
9	O-ring 47,22 x 3,53	829269	829269
10	Pressure plate	400706	400706
11	Cylinder head 1	400787	400781
12	Cylinder head 2	400788	400782
13	Cylinder head 3	400789	400783
13	Cylinder head 4	400808	400807
13	Cylinder head 5	400863-1	400863
14	O-ring 28 x 2	829252-2	829252-2
15	Valve gasket	400656	400656
16	Pump head	400643	400705
17	Strain washer	400617	400707
18	Diaphragm	400732	400732
19	Pressure disc	400680	400680
20	Weight balance	400678-1	400678-1

10 Damage Report

ILMVAC GmbH
Am Vogelherd 20
D-98693 Ilmenau
Telephone: +49 36 77 60 40
Fax: +49 36 77 60 41 10

Company

Customer's Order No:	**Date:**
Type:	**Warranty: Yes/No**
Type-No:	**Ser-No.:**

1. Description of Fault

a)	Was the pump/ components in use?*	yes	no
b)	Which oil was used?*	_____	
c)	Is the pump/ component free of hazardous substances?	yes	continue at section 3
		no	continue at section 2

2. Type of contamination of pump/ component

a)	toxical**	yes	no
b)	etching**	yes	no
c)	micro-biological**	yes	no
d)	explosive**	yes	no
e)	radio-active**	yes	no
f)	other contaminates**	yes	no

* in rotary vane vacuum pumps and roots pumps
** pumps/ components can only be accepted with proof of correct decontamination or cleaning resp. If agreed the decontamination/ cleaning work can be carried- out at ILMVAC GmbH.

Type of contaminates or dangerous process reaction products the pumps/ components were in contact with.

Trade name Product name Manufacture	Chemical description (formula if possible)	Hazardclass	Measures in case of escape of contaminates	First aid in case of accidents
1.				
2.				
3.				
4.				
5.				

3. Official declaration

I/ we ensure that the data/ information given is correct and complete. The despatch of the pump/ component is performed in accordance with the prevailing law.

Contact's name: _____ Phone: _____

Dept.: _____ Fax: _____

Date: _____ Company stamp:

Official signature: _____

The repair can only be carried-out, if the Damage Report duly completed is submitted. Otherwise the repair work might be delayed. Our General/ Conditions of Sale apply.

Operating manual
incl. Declaration of conformity

PFEIFFER VACUUM

TPG 251 A

Vacuum measurement and control unit
for Compact Gauges

SingleGauge™

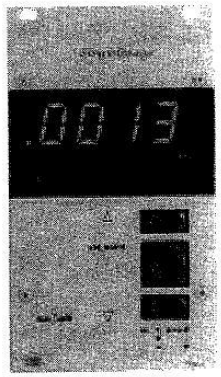

CE

Product identification

When communicating with Pfeiffer Vacuum, the information given on the product nameplate is required. Transfer therefore this information to this manual.

Pfeiffer Vacuum, D-35614 Asslar
Typ:_____
No: _____
F-No:_____
___V _____Hz ___VA

Validity

This manual applies to products with part number

PT G28 020	(230 V~)
PT G28 022	(120 V~)
PT G28 023	(100 V~)

The part number can be taken from the nameplate.

This document is based on firmware number

BG 509 727 -C

If your unit does not behave as described in this document, please check whether it is equipped with this firmware version (→ Appendix C).

We reserve the right to make engineering changes without notice.

Intended use

The SingleGauge™ (TPG 251 A) is used together with Pfeiffer Vacuum Compact Gauges for measuring total pressures. The products must be operated as described in the respective manuals.

Trademarks

SingleGauge™	Balzers AG
FullRange™	Balzers AG

Table of contents

For cross references within this document, the symbol (→ 🗎 XY) is used, for cross references to other documents, the symbol (→ 🕮 [Z]).

1 Safety

1.1 Safety information

a) Take the necessary precautions when doing installation, maintenance or repair work (→ 🗎 11, 48, 57, 59).

b) According to EN 61010, voltages above 30 V~ or 60 V= present a hazard of contact. Make sure to adhere to the respective safety measures (→ 🗎 11, 13, 59).

Pass on the safety information to other users.

1.2 Explanation of symbols

Specialists:
These tasks may only be carried out by persons with a suitable technical education and the necessary experience.

DANGER:
Information on preventing any kind of personal injury or extensive equipment damage.

CAUTION:
Special information on damage prevention.

NOTE:
Special information on cost-effective use.

Press this key

Press this key additionally

Press these keys simultaneously

Result is O.K.

Result not as expected

	Waiting, reaction time, duration of test
	Tip, recommendation
	Lamp / display is lit
	Lamp / display flashes
	Lamp / display is dark
<set point>	Exact lettering on the key, connector, etc.
«on»	LED display
« :8.8.8.8 »	7-segment display
»on« / »off«	State of a switching function (e.g. relay)

1.3 General stipulations

Pfeiffer Vacuum accepts no responsibility nor warranty if the user or third parties make any kind of changes to the product that exceed the work mentioned in the product documentation.

Since the individual electronic components are delicate, appropriate measures must be taken to protect them from static electricity.

Damage resulting from disregard of the above warning may lead to a revocation of the warranty.

2 Design

2.1 Front panel

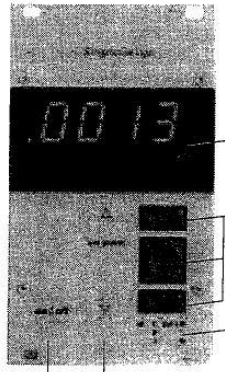

Fig. 2-1: Front panel

1	Display	Meaning	
	cal	Calibration factor for gauge	→ 35
	on	Gauge ON	→ 21
	sp	Switching function for gauge	→ 23
	hi lo	Upper / lower threshold	→ 24
	mbar / bar Torr Pa	Pressure units	→ 33
	err	Error	→ 52
2		Control keys	
3		Pressing two keys simultaneously	→ 25, 27

2.2 Compatible gauges

→ 🗎 42 for full type desigation.

Compact Pirani Gauge

Compact Cold Cathode Gauge

Compact FullRange™ CC Gauge (Pirani and Cold Cathode Gauge)

Compact Process Ion Gauge (Pirani and High Pressure Gauge)

Compact Piezo Gauge

Compact Capacitance Gauge

2.3 Display formats

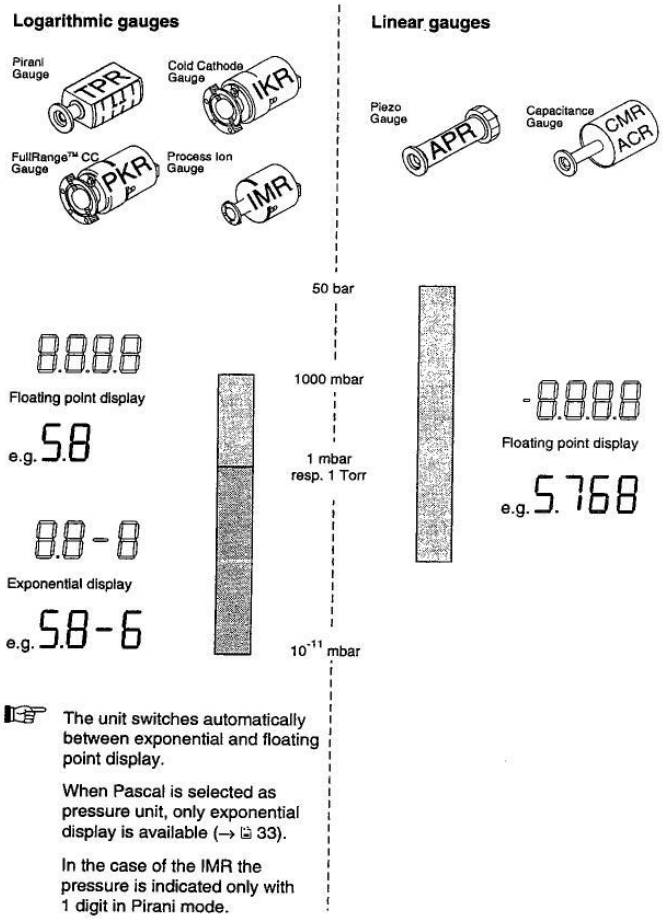

The unit switches automatically between exponential and floating point display.

When Pascal is selected as pressure unit, only exponential display is available (→ 🗎 33).

In the case of the IMR the pressure is indicated only with 1 digit in Pirani mode.

2.4 Back panel

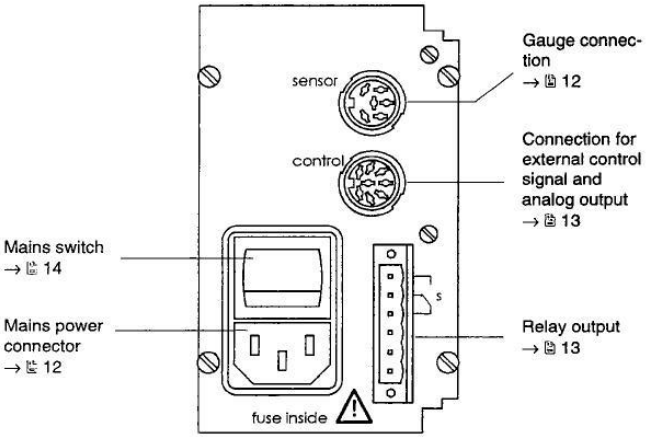

Fig. 2-2: Back panel

3 Installation

If for any reason you can assume that the unit is not safe to operate, shut it down and secure it so that it cannot be inadvertently turned on again.

You can assume that the unit is not safe to operate when:

- it has sustained visible damage
- it no longer functions
- it has been stored for a longer period under unfavorable conditions
- it has been subjected to severe transport stress

3.1 Installing and mounting the unit

The SingleGauge™ is designed for installation in a 19" rack adapter frame according to DIN 41 494 (→ 55).

If the unit is to be installed in a rack, it must not lower the protection class of the rack (protection against foreign objects and water) e.g. DIN VDE 0113 regulations for switch cabinets when in place.

Take into account the safety measures (→ 13, 59) for voltages above 30 V~ or 60 V= at the connector <s1> or <s2.

The ambient temperature inside the rack must not exceed +50°C.

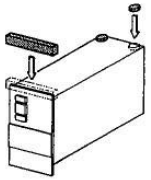

If you want to use the SingleGauge™ as bench top unit, attach the two rubber feet supplied to it. The rubber bar should be attached to the front panel from below.

3.2 Connectors

3.2.1 Mains power connector

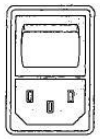

Before connecting the SingleGauge™ to the mains power supply, verify that the power setting (given on the nameplate) agrees with the local mains power data. If they do not agree, convert the voltage of the unit according to the instructions given in Appendix A.

The power connector may only be plugged into a socket with a protective earth. Use only 3-channel mains power cables with the protective earth connected correctly. This protection must not be nullified by an extension cable without ground conductor.

To assure continuous grounding protection, connect the mains power cable before connecting any other cables. In the same way, disconnect all other cables before disconnecting the mains power cable.

If the unit is installed in a rack, the mains voltage should be supplied by and turned on via a central power distributor.

3.2.2 <sensor> connector

Here you can connect either:

- a Pirani Gauge
- a Cold Cathode Gauge
- a Compact FullRange™ CC Gauge
- a Process Ion Gauge
- or a linear gauge

Always turn the unit off before connecting or disconnecting a gauge.

3.2.3 <control> connector

Use this connector to:

- turn the Cold Cathode Gauge or the process ion gauge on/off via an external signal
- to further evaluate the analog measurement signal
- to evaluate any error signals

Use the enclosed connector (Pin assignment → 46).

3.2.4 <s> connector

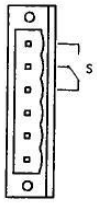

Use this relay output if you want to use the switching functions for external control.

Take into account the respective safety measures (→ 59) and technical data (→ 42, 46).
When the SingleGauge™ is used as bench top unit, a maximum voltage of 30 V~ or 60 V= may be connected (protective low voltage).

Use the enclosed connector and screw it to the connector of the unit. The connector may only be plugged in or unplugged when the power line is idle.

4 Operation

4.1 Initial start up

Before turning the unit on, make sure that the operating voltage for the unit agrees with the local mains power. Also verify that the unit is correctly grounded, that all the gauges and cables are correctly installed (→ 11) and that the technical data are met (→ 42).

Any break in the protective grounding inside or outside the unit and any loosening of the grounding connection can make the unit dangerous to operate. Intentional interruption of the grounding line is not admissible.

4.2 Turning the unit on

The power switch is located on the back panel. Turn on stand-alone units from this power switch, rack mounted units from the central power distributor.

After the unit is turned on, it:

- runs through a self-diagnostics routine
- identifies the gauge connected
- activates the parameters effective when the unit was last turned off
- switches to measuring mode (on sensor 1)
- adjusts the parameters (if any other gauge was connected in the meantime)
- displays a pressure indication, a status indication, or an error message

The status indications « OR » and « UR » as well as the error messages « Er » are output according to the pressure unit and calibration factor settings. The indications in this document refer to the pressure unit mbar and a calibration factor of 1.00.

Pirani Gauge

The unit displays e.g. « 1.3 - 2 » (1.3×10^{-2}) or « 130 » (floating point display). The measured value is within the measurement of the gauge.

The unit displays « UR - 4 ». The pressure in the vacuum system is lower than the lower limit of the measurement range of the connected Pirani Gauge or the gauge is no longer adjusted (→ [2], [3], [5]).

The unit displays « OR ». The pressure in the vacuum system is higher than the upper limit of the measurement range of the connected Pirani Gauge or the gauge is no longer adjusted (→ [2], [3], [5]).

The unit displays « noSE ». No gauge is connected.

The unit displays « Er - 4 ». In addition, the «err» lamp is flashing. The Pirani Gauge has an error (→ 52).

The unit displays « dt ». In addition, the «err» lamp is flashing. You have turned the unit back on too quickly after turning it off (→ 20).

The unit displays « oFF ». The connected Cold Cathode Gauge is not turned on (→ 21).

The unit displays e.g. « 2.8 - 6 » (2.8×10^{-6}). The measured value is within the measurement range of the gauge.

The unit displays « ur - 9 ». The pressure in the vacuum system is lower than the lower limit of the measurement range of the connected Cold Cathode Gauge or the gas discharge has not yet ignited (→ [6], [7], [8], [9]).

The unit displays « ur - 1 ». The pressure in the vacuum system is lower than the lower limit of the measurement range of the connected Cold Cathode Gauge or the gas discharge has not yet ignited (→ [10]).

The unit displays « or - 2 ». The pressure in the vacuum system is higher than the upper limit of the measurement range of the connected Cold Cathode Gauge.

The unit displays « noSE ». No gauge is connected.

The unit displays « Er - 9 ». In addition, the «err» lamp is flashing. The Cold Cathode Gauge has an error (→ 53).

The unit displays « Er - 1 ». In addition, the «err» lamp is flashing. The Cold Cathode Gauge has an error (→ 53).

The unit displays « dt ». In addition, the «err» lamp is flashing. You have turned the unit back on too quickly after turning it off (→ 20).

The unit displays e.g. « 2.8 - 6 » (2.8×10^{-6}) or « 130 » (floating point format). The measured value is within the measurement range of the gau

The unit displays « ur - 9 ». The pressure in the vacuum system is lov than the lower limit of the measurement range of the connected Compact FullRange™ CC Gauge (→ [11], [12], [13], [14]).

The unit displays « ur - 4 » and the green lamp on the gauge is lit. Th measured value is lower than 5×10^{-4} mbar and the gas discharge of the connected Compact FullRange™ CC Gauge has not yet ignited.

The unit displays « or ». The pressure in the vacuum system is higher than the upper limit of the measurement range of the connected FullRange™ CC Gauge.

The unit displays « noSE ». No gauge is connected.

The unit displays « Er - 9 », « Er - 4 » or « Er ». In addition, the «err» lamp is flashing. The FullRange™ CC Gauge has an error (→ 53).

The unit displays « dt ». In addition, the «err» lamp is flashing. You have turned the unit back on too quickly after turning it off (→ 20).

Process Ion Gauge

The instrument shows e.g. «2.8 - 6» (2.8×10^{-6}). The measured value is within the measurement range of the gauge (process ion gauge)

The unit displays e.g. «1 - 2» (1×10^{-2}) or «30» (floating point format). The measured value is within the Pirani range of the gauge.

The instrument indicates «oFF». You have connected a Process Ion Gauge that is switched off (→ 21).

The unit displays «ur - 2». The pressure in the vacuum system is lower than the lower limit of the measurement range in pirani adjustment mode (→ [15]).

The unit displays «ur - 6». The pressure in the vacuum system is lower than the lower limit of the measurement range.

The unit displays «or». The pressure in the vacuum system is higher than the upper limit of the measurement range of the connected gauge.

The unit displays «noSE». No gauge is connected.

The unit displays «Er - 6». In addition, the «err» lamp is flashing. The Gauge has an error (→ 53).

The unit displays «dt». In addition, the «err» lamp is flashing. You have turned the unit back on too quickly after turning it off (→ 20).

Piezo Gauge

or

Capacitance Gauge

The unit displays e.g. «1234» (floating point format). The measured value is within the measurement range of the gauge.

The unit displays «ur». The pressure in the vacuum system is below th measuring range of the connected linear gauge, or below the offset range the offset is activated (→ 37).

The unit displays «or». The pressure in the vacuum system is higher than the upper limit of the measurement range of the connected linear gauge, or higher than the offset range if the offset is activated (→ 37).

The unit displays «noSE». No gauge is connected.

The unit displays «Er». In addition, the «err» lamp is flashing. The linea gauge has an error (→ 53).

The unit displays «dt». In addition, the «err» lamp is flashing. You have turned the unit back on too quickly after turning it off (→ 20).

4.3 Turning the unit off

Turn the unit off with the power switch (or centrally via the power distributor, for rack mounted units).

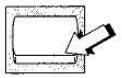

turning the unit off

Wait at least 10 seconds before turning the unit back on.

10 seconds

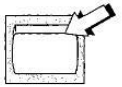

turning the unit back on

4.4 Displaying the connected gauge

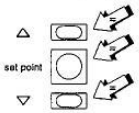

When the unit is in the measurement mode, you can display the type of gauge connected by briefly pressing all three keys together.

The display codes have the following meaning:

«P ir»	Pirani Gauge
«PE 9»	Cold Cathode Gauge with a lower measurement range limit of 10^{-9} mbar
«PE 11»	Cold Cathode Gauge with a lower measurement range limit of 10^{-11} mbar
«Co 9»	FullRange™ CC Gauge with a lower measurement range limit of 10^{-9} mbar
«Ion»	Process Ion Gauge with a lower measurement range limit of 10^{-6} mbar
«L in»	Linear gauge

«noSE»	No gauge connected
«no Id»	Gauge not identified

4.5 Turning the gauge on / off

This function is available for the following gauge:

- ☐ Pirani Gauge
- ☑ Cold Cathode Gauge
- ☐ Compact FullRange™ CC Gauge
- ☑ Process Ion Gauge
- ☐ Linear gauge

☞ Any attempt to turn off another gauge results in the display of the type of the gauge connected (→ 20).

⚠ Turning a gauge on or off can affect the status of a relay.

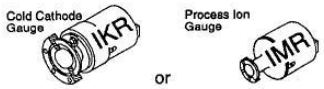

When the unit is in measurement mode, a connected Cold Cathode Gauge or process ion gauge can be turned on / off manually if the following two conditions are met: the entry lock function is disabled (→ 34) and the gauge control is set to «HAnd» (→ 40).

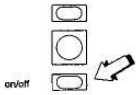

Turn the gauge on and off by pressing the <on/off> key [1]. When the gauge is on, the «on» lamp is lit.

☞ To prevent unnecessary contamination of the Cold Cathode Gauge, turn it on at pressures lower 10^{-2} mbar only.

[1] The <on/off> and < ▽ > keys are identical

4.6 Displaying the threshold values

The unit has one switching function with two adjustable threshold values. This controls the relay behavior.

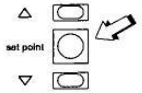

When the unit is in measurement mode, you can display the threshold values of the switching function.

Press and hold down the <set point> key; the unit is now in switching function mode.

Each time the key is pressed, the display changes from the upper to the lower threshold or vice versa. The indicators «sp...» and «hi» or «lo») are flashing to show which threshold value is being displayed.

When the <set point> key is released, the display returns to the measurement mode.

The display codes have the following meaning:

«sp» «lo»	lower threshold of the switching function
«sp» «hi»	upper threshold of the switching function

☞ Take account of the display formats (→ 9)

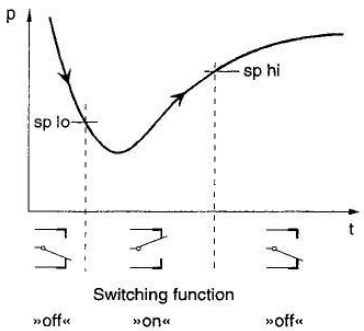

pressure measured

upper threshold

lower threshold

Contact position of the relay (→ 46)

The lower threshold (sp lo) defines the value at which the switching function is activated when the pressure is dropping.

The upper threshold (sp hi) defines the value at which the switching function is deactivated when the pressure is rising.

4.7 Adjusting the threshold values

The threshold values can only be adjusted when the entry lock is disabled. If the entry lock function is enabled, «LOC» is displayed when attempting to adjust a threshold value (→ 34).

If any other gauge was connected previously, the threshold values may have been adjusted automatically.

Any threshold value entered that is outside the measurement range will be changed so that it corresponds to the lower (upper) measurement range limit.

If both threshold values entered are outside the measurement range, they will be modified correspondingly, and the minimum hysteresis will be taken into account (→ sections 4.7.1 and 4.7.2).

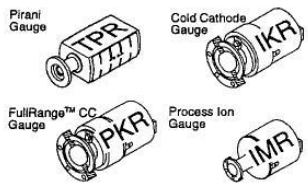

4.7.1 Logarithmic gauge

If you want to change a threshold value, you must first display it (→ 23).

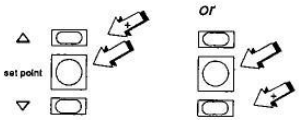

When the threshold value you want to change is displayed, additionally press:

- < △ > to increase the value
- < ▽ > to reduce the value

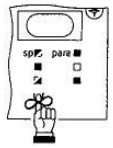

Exponential display (threshold value < 1 mbar)

Briefly tapping the < △ > or < ▽ > key changes the mantissa value by 0.1 for each tap.

If you keep pressing the key, the mantissa value scrolls automatically in steps of 1.0.

Depending on the calibration factor entered (→ 35), the adjustment range for a particular threshold value can go above or below the measurement range for the gauge by a factor 10.

When the two keys are released, the changed threshold is automatically stored in nonvolatile memory.

The minimum hysteresis between the lower and upper threshold value is 10% of the lower threshold value. This prevents unstable states. If you should define the upper threshold value lower then the lower threshold value, the minimum hysteresis is entered automatically.

Floating point display (threshold value ≥ 1 mbar)

Briefly tapping the < △ > or < ▽ > key changes the second visible digit from the left by 1 for each tap.

If you keep pressing the key, the first visible digit scrolls.

Pirani Gauge

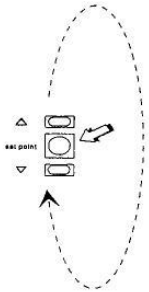

Unit	Pressure unit (→ 33)
LOC	Entry lock function (→ 34)
FI 1	Filter time constant gauge (→ 34)
CAL 1	Calibration factor gauge (→ 35)

Adjusting the parameters

Cold Cathode Gauge

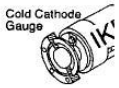

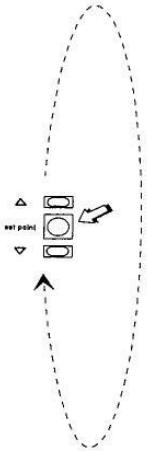

Unit	Pressure unit (→ 33)
LOC	Entry lock function (→ 34)
FI 1	Filter time constant gauge (→ 34)
CAL 1	Calibration factor gauge (→ 35)
PC 1	Gauge control (→ 40)
PU 1	Gauge underrange control (→ 40)

FullRange™ CC Gauge

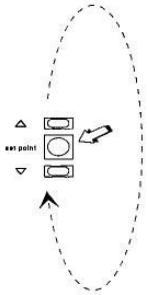

Unit	Pressure unit (→ 33)
LOC	Entry lock function (→ 34)
F1 1	Filter time constant gauge (→ 34)
CAL 1	Calibration factor gauge (→ 35)

Process Ion Gauge

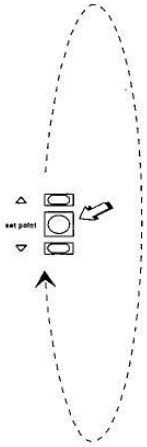

Unit	Pressure unit (→ 33)
LOC	Entry lock function (→ 34)
F1 1	Filter time constant gauge (→ 34)
CAL 1	Calibration factor gauge (→ 35)
IC 1	Gauge control (→ 40)

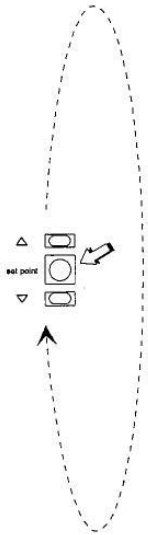

Unit	Pressure unit (→ 33)
LOC	Entry lock function (→ 34)
F1 1	Filter time constant gauge (→ 34)
CAL 1	Calibration factor gauge (→ 35)
FS 1	Measurement range gauge (→ 37)
OFC 1	Offset correction gauge (→ 37)
OFd 1	Offset value gauge (→ 37)

4.8.1 Selecting the pressure unit Unit

Changing the pressure unit affects:

- ☑ the display
- ☑ the switching function (threshold display)
- ☐ the analog output of the unit

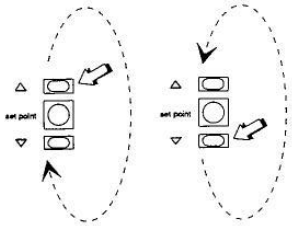

bAr	mbar / bar
torr	Torr
PASC	Pascal

The pressure unit selected is indicated by the «mbar», «bar», «Torr» or «Pa» lam

Display range with different pressure units

The selection of the pressure unit depends on the gauges used. The SingleGauge™ allows for a particular pressure unit only, if the entire measuremer range can be displayed with that pressure unit.

Logarithmic gauge

Measurement range	mbar / bar	Torr	Pascal
10^{-11} mbar ... 1000 mbar	☑	☑	☑

Linear gauge

Full scale value (defined measurement range)	mbar / bar	Torr	Pascal
1 mbar	☑	☑	☑
10 mbar	☑	☑	☑
100 mbar	☑	☑	
1000 mbar	☑	☑	
2 bar	☑	☑	
5 bar	☑	☑	
10 bar	☑		
50 bar	☑		

Conversion tat → 67

4.8.2 Enabling the entry lock function LOC

The entry lock function has been included to prevent inadvertent entries.

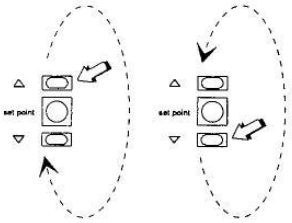

oFF — Entry lock function disabled:
All operating steps are possible.

on — Entry lock function enabled:
The following operating steps are not possible:

- Adjusting the threshold values
- Switching a gauge on / off

When the entry lock function is enabled, « LOC » is displayed when the threshold value is changed or a gauge is turned on / off.

4.8.3 Adjusting the measured value filter FI

The measured value filter allows for a better evaluation of unstable or disturbed measurement signals. It affects:

☑ the display
☑ the switching function
☐ the analog output of the unit

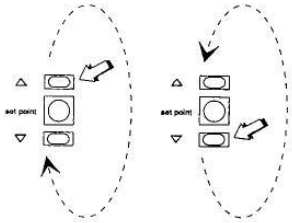

nor — Normal filter time constant (320 ms)

SLo — Slow filter time constant (2.6 s)

FASt — Fast filter time constant (35 ms)

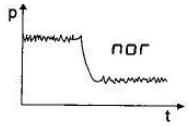

Standard setting with a good relationship between the reaction time and the sensibility of display and switchin functions with regard to changes in the measured value

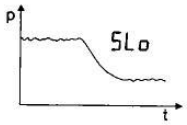

Select this setting if you wish that the display and the switching functions do not react to small variations of th measured value. The unit will, however, react slower to changes in the measured value.

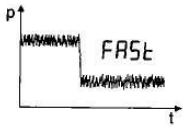

Select this setting if you wish that the display and the switching functions react fast to changes in the measure value. The unit will, however, be more sensitive to distu bances with regard to the measured values.

4.8.4 Adjusting the calibration factor CAL

The calibration factor allows the measured value to be calibrated for gases other than N_2. It affects:

☑ the display [1)]
☑ the switching function (threshold value display) [1)]
☐ the analog output of the unit

⚠ The status indications « OR » and « UR » as well as the error messages « Er » are output according to the pressure unit and calibration factor settings. The indications in this document refer to the pressure unit mbar and a calibration factor of 1.00.

[1)] For Compact Ion Gauges in the hot cathode measurement range only

4.8.4.1 Logarithmic gauge

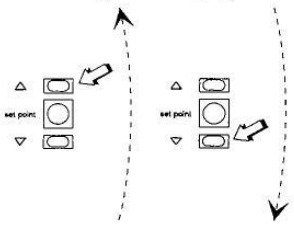

9.99 max. calibration factor (× 9.99)

0.10 min. calibration factor (× 0.10)

Briefly tapping the < △ > or < ▽ > key changes the value of the mantissa by 0.01 for each tap.

If you keep pressing the key, the value scrolls automatically in steps of 0.1.

If the calibration factor does not equal 1.00, the «cal» lamp is lit.

4.8.4.2 Linear gauge

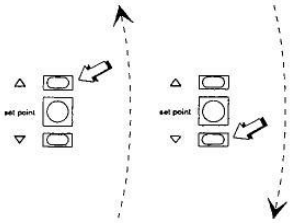

2.000 max. calibration factor (× 2.000)

0.500 min. calibration factor (× 0.500)

Briefly tapping the < △ > or < ▽ > key changes the value of the mantissa by 0.001 for each tap.

If you keep pressing the key, the value scrolls automatically in steps of 0.01.

If the calibration factor does not equal 1.000, the «cal» lamp is lit.

4.8.5 Adjusting the measurement range of a linear gauge F5

When using a linear gauge, it is necessary to save the full scale value of the gauge as parameter in order for the correct measured value to be displayed.The measurement range is defined by entering the upper limit of the measurement range.

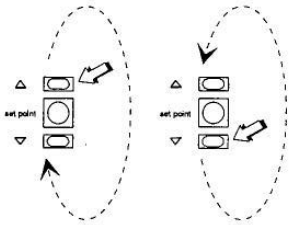

1 «mbar»
10 «mbar»
100 «mbar»
1000 «mbar»
2 «bar»
5 «bar»
10 «bar»
50 «bar»

4.8.6 Offset function (zero adjustment) of a linear gauge

The offset correction function allows for zero adjustment to the value being measured within -5 ... +110 % of the measurement range considered.

The offset correction function affects:

- ☑ the display
- ☑ the switching function (threshold value display)
- ☐ the analog output of the unit

This function can be used for two different purposes:

- **Zero adjustment of linear gauges**
  There are two methods for adjusting the zero of a linear gauge. Note, however, that the actual pressure must be lower than the lower limit of the measurement range of the gauge:
  - Set the zero by adjusting the "ZERO" potentiometer of the gauge → [16], [17], [18]
  - With the offset function of the measurement and control unit set the currently indicated pressure to zero

  The advantage of the second method is that no direct access to the potentiometer of the gauge is required.
- **Zeroing at any pressure within the measurement range of a linear gauge**
  The pressure reading of the measurement and control unit can be set to zero at any pressure within the measurement range of a linear gauge. All subsequent readings will then be relative to that offset value and may therefore be positive or negative. This method allows for monitoring of pressure variations during a process.

4.8.6.1 Displaying and adjusting the offset value OFd

Action	Result
Select « OFd » menu (→ 27)	---5.768--- « cal » (Last offset value saved)
2s or 2s	10.3 « cal » The value being measured (without offset) is accepted as new offset value
	Returning to the measurement mode (→ 27) causes the new offset value to be saved

4.8.6.2 Enabling the offset correction function of a linear gauge OFC

With the offset correction function enabled, the saved offset value is subtracted from the value being measured.

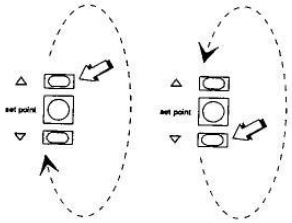

on	The offset correction function is enabled
oFF	The offset correction function is disabled

Example

Value measured	Offset value saved	Display when OFC = on	Display when OFC = oFF
« 10.3 »	« 10.3 »	« 0 »	« 10.3 »
« 17.4 »	« 10.3 »	« 7.1 »	« 17.4 »
« 7.4 »	« 10.3 »	« -2.9 »	« 7.4 »

⚠ For setting the zero by adjusting the potetiometer of the gauge, set OFC to oFF.

4.8.7 Adjusting the gauge control PC or IC

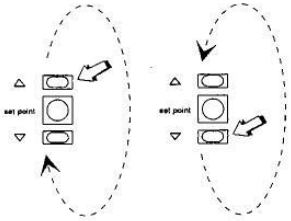

HAnd — manual control with <on/off> key

Etrn — external control via the <control> connector (→ 13, 42)

⚠ Turning a gauge on or off can affect the status of a relay.

4.8.8 Adjusting the gauge underrange control PU

This function is available for the following gauge:

- ☐ Pirani gauge
- ☑ Cold Cathode Gauge
- ☐ Compact FullRange™ CC Gauge
- ☐ Process Ion Gauge
- ☐ Linear gauge

There is a number of possible causes of an underrange (e.g. « ur-9 »):

- ☑ the pressure in the vacuum system is lower than the lower limit of the measurement range
- ☑ the measurement element has not (yet) ignited
- ☑ the discharge has failed
- ☑ a defect has occurred

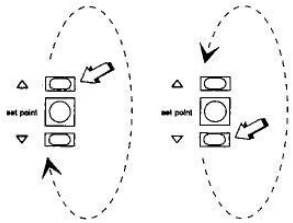

oFF — An underrange state is interpreted as an admissible measured value. « ur-9 » is displayed. The switching function remains »on«.

on — An underrange state is interpreted as an inadmissible measured value. « ur-9 » is displayed. The switching function changes to »off«.

☞ In the « on » setting, the evaluation of the switching function is suppressed for approx. 10 seconds when the Cold Cathode Gauge is turned on and each time after an underrange has occurred. During this time, the switching function remains »off«.

If chances are that the pressure in the vacuum chamber is under the lower limit of the measurement range of the gauge, it is advisable to select « oFF ».

5 Technical data

Admissible temperature	
Storage	-40°C ... +65°C
Operation	+ 5°C ... +50°C
Relative humidity	max. 80% at temperatures up to +31°C decreasing to 50% at +40°C
Use	indoors only altitude up to 2000 m

Number of gauges	1
Compatible gauges	
Compact Pirani Gauges	TPR 250, TPR 260, TPR 261, TPR 265
Compact Cold Cathode Gauges	IKR 250, IKR 251, IKR 260, IKR 261, IKR 270
Compact FullRange™ CC Gauges	PKR 250, PKR 251, PKR 260, PKR 261
Compact Process Ion Gauge	IMR 260
Compact Capacitance Gauges	CMR 261, CMR 262, CMR 263, CMR 264, CMR 271, CMR 272, CMR 273, CMR 274 ACR 261, ACR 262, ACR 263, ACR 274
Compact Piezoresistive Gauges	APR 250, APR 260, APR 262, APR 265, APR 266, APR 267

Measurement range, measurement error, repeatability (gauge)	depending on the gauge used (→ 🕮 [2] ... [18])
Measurement error (control unit)	
Gain error	≤ 0.2 % measurement signal
Offset error	≤ 20 mV.
Measurement rate	100 per s
Display rate	4 per s

Filter time constants	
normal	320 ms (f_g = 0.5 Hz)
fast	35 ms (f_g = 4.5 Hz)
slow	2.6 s (f_g = 0.06 Hz)

Switching functions	1
type of contact	potential free changeover contact (contact open ⇒ switching function »off«, gauge or unit turned off)
maximum load	240 V~ ; 5 A ; 1200 VA 200 V= ; 5 A ; 40 W

When the SingleGauge™ is used as bench unit, a maximum of 30 V~ or 60 V= may be switched (protective low voltage)

Uptime	
mechanical	5×10^7 cycles
electrical	1×10^5 cycles (at maximum load)
Reaction time	≤ 15 ms, if the threshold value is close to the measured value (at higher differences, take the filter time constant into consideration)

Error signal (error contact)	
type of contact	potential free changeover contact (contact open ⇒ error or unit turned off)
maximum load	50 V~ ; 1.5 A 50 V= ; 1.5 A; 40 W
Uptime	
mechanical	5×10^7 cycles
electrical	1×10^5 cycles (at maximum load)

Gauge supply	
voltage	20.5 ... 30 V unstabilized, ripple ≤1 V_{PP}
current	≤200 mA protected with PTC element, self-resetting after power off

Turning the cold cathode gauge or process ion gauge on / off	
manually	from <on/off> key
externally	via <control> connector internal pull-up 3.3 kΩ to 5 V Control with - TTL signal - open collector - relay contact high: ≥ 2.0 V or input open ⇒ gauge turned off low: ≤ 0.8 V ⇒ gauge turned on
Analog output signal	
voltage range	0 V ... +10 V
internal resistance R_i	660 Ω
relationship between measurement signal and pressure	→ 🕮 [2] ... [18]
Safety	EN 61010-1 : 1993 (IEC 1010)
type of protection	I
degree of contamination	II
electromagnetic compatibility	emission EN 50081-1 immunity EN 50082-2
Mains power connector	
voltage	230 V~, +10 %, -14 % 208 V~, +10 %, -14 % 120 V~, +10 %, -14 % 100 V~, ±10 %
frequency	50 ... 60 Hz
power consumption	14 VA
overvoltage category	II
fuses F1, F2	built in the unit 230 V~, 0.1 AT, 250 V, ø5×20 mm 208 V~, 0.1 AT, 250 V, ø5×20 mm 120 V~, 0.2 AT, 250 V, ø5×20 mm 100 V~, 0.2 AT, 250 V, ø5×20 mm
Minimum waiting time between turning the unit off and back on	10 seconds

Dimensions

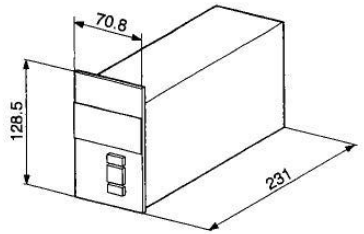

Use	as bench top unit or for rack mounting
Weight	1.3 kg

Pin assignments

Cables may be made and adjusted only by persons with a suitable education in electro-technics.

Take account of the Technical data in order to prevent the unit from being overloaded, endangered, or destroyed.

<sensor> connector

Amphenol C91B, 6-pin, female

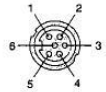

View to SingleGauge™

Pin assignment:

Pin 1: Identification
Pin 2: GND
Pin 3: Meas. signal +
Pin 4: Meas. signal -
Pin 5: Screening [1]
Pin 6: V_{cc}

<control> connector

Amphenol C91B, 7-pin, female

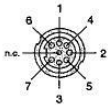

View to SingleGauge™

Pin assignment:

Pin 1: not connected
Pin 2: Analog output gauge
Pin 3: Error
Pin 4: Gauge On / OFF
Pin 5: GND, screening [1]
Pin 6: not connected
Pin 7: Error

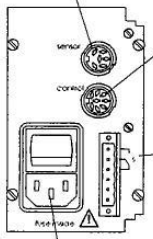

Relay connector

Phoenix Combicon, 6-pin, male

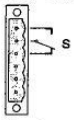

View to SingleGauge™

Contacts shown in idle position. Switching function = »off«

Mains power connector

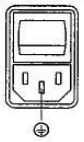

[1] Use screened cables only (electromagnetic compatibility)

Details with regard to the <control> connector

External command of the Cold Cathode Gauge and process ion gauge

Pin 5 of the SingleGauge™ is directly connected to the protective ground. Therefore, take appropriate measures to protect the unit from earth currents.

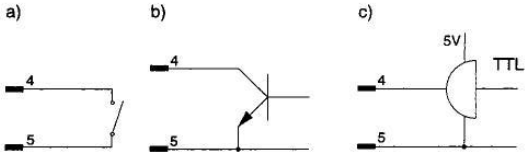

Evaluation of the analog output voltage

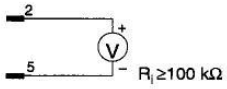

Evaluation of the error signal

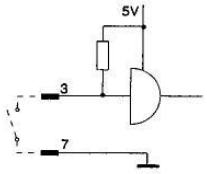

6 Maintenance and cleaning

The SingleGauge™ vacuum measurement and control unit requires no maintenance. For maintenance of the gauges, refer to the respective documents [2] ... [18].

Turn the unit off and remove all cables (the mains power cable at last) before doing any of the work described below.

For cleaning the outside of the unit, a slightly humid cloth will usually do. Do not use under any circumstances an aggressive or scouring cleaning agent. No water must get into the unit! Before putting the unit into operation again, allow it to dry thoroughly.

In a very dusty environment, the dust inside the unit should be periodically removed (Opening the unit → Appendix A). Carefully remove the dust with dry compressed air.

7 Status indications

Visualization of status messages

err «err» lamp is dark (Error contact = »closed«)

8.8.8.8 Specification of the status message on the display.

These status indications are displayed for information only. They do not release any Error messages.
For details regarding gauge specific status indications
→ [2] ... [18].

The status indications « OF » and « UF » as well as the error messages « Er » are output according to the pressure unit and calibration factor settings. The indications in this document refer to the pressure unit mbar and a calibration factor of 1.00.

Display	Possible cause	Correction
« Etrn » is displayed when pressing the <on/off> key	In automatic gauge control mode, you have attempted to switch the Cold Cathode Gauge or the Process Ion Gauge on or off	Gauge control (→ 40)
« LOC » is displayed when pressing the <on/off> key	You attempted to switch the Cold Cathode Gauge or the Process Ion Gauge on or off with the entry lock function enabled	Entry lock function (→ 34)
« LOC » is displayed when simultaneously pressing the <set point> and the < △ > or the < ▽ >key	You have attempted to change the threshold value with the entry lock function enabled	Entry lock function (→ 34)

Display	Possible cause	Correction
«no Id»	Gauge identification error	Check the corresponding connection cable. Use an appropriate gauge (→ 42)
«noSE»	No gauge connected	Switch the unit off, connect a gauge, and switch the unit on again
«Co 9» is displayed when pressing the <on/off> key	You have attempted to switch off the FullRange™ CC Gauge	The FullRange™ Gauge CC cannot be switched off
«L in» is displayed when pressing the <on/off> key	You have attempted to switch off the linear gauge	The linear gauge cannot be switched off
«P ir» is displayed when pressing the <on/off> key	You have attempted to switch off the Pirani gauge	The Pirani gauge cannot be switched off
«ur»	Linear gauge: The measured value is under the lower limit of the measurement range of the gauge connected Incorrect HV adjustment	- (Standard case when used for high vacuum measurement) Adjustment → [16], [17], [18]
«ur-2»	Process Ion Gauge Measurement result below instrument range	– Quit Pirani adjustment mode of the gauge → [15]
«ur-4»	Pirani: The measured value is under the lower limit of the measurement range of the gauge connected Incorrect HV adjustment FullRange™ CC Gauge: The gas discharge has not yet ignited	- (Standard case when used for high vacuum measurement) Adjustment → [2], [3], [5] Wait until the gas discharge ignites
«ur-6»	Process Ion Gauge: Measurement result below instrument range	- (Standard case when used for high vacuum measurement)

Display	Possible cause	Correction
«ur-9»	FullRange™ CC Gauge: underrange Cold Cathode Gauge: underrange The gas discharge may not have ignited yet The gauge is severely contaminated (insulating layers)	- (Standard case when used for ultra high vacuum measurement) - (Standard case when used for ultra high vacuum measurement) (Adjust the gauge underrange control → 40) Wait until the gas discharge ignites Cleaning the gauge → [6], [7], [8], [9]
«urH1»	Cold Cathode Gauge: Measurement result below instrument range Gas discharge may possibly not have ignited yet. The gauge is severely contaminated (insulating layers)	- (Standard case when used for ultra high vacuum measurement) (Setting the gauge behavior → 40) Wait until the gas discharge ignites Cleaning the gauge → [10]
«or»	Linear gauge: overrange Pirani / FullRange™ CC Gauge / Compact Process Ion Gauge: overrange	- - (Adjustment → [2], [3], [5], [11], [12], [13], [14], [15])
«or-2»	Cold Cathode Gauge: overrange	Turn the Cold Cathode Gauge off (risk of contamination)

8 Error messages

Visualizing error messages

The «err» flashes (Error contact = »off«)

8.8.8.8 Specifies the error message

The status indications « OR » and « UR » as well as the error messages « Er » are output according to the pressure unit and calibration factor settings. The indications in this document refer to the pressure unit mbar and a calibration factor of 1.00.

Acknowledging error messages

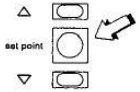

After you have acknowledged the error message:

- the unit returns to the measurement mode, if the error has been corrected
- the error is displayed again if it has not been corrected
- the next error is displayed, if there are any further errors

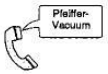

If you cannot correct the error yourself, please contact your nearest Pfeiffer Vacuum Service Center

Error displayed	Possible cause	Acknowledgment/ correction
No status indication when the unit is turned on	Power cable interrupted	Check the power cable
	Fuses defective	Replace the fuses (→ 57)
	The voltage setting of the unit does not agree with the local line voltage	Adjust the equipment voltage (→ 57)
«Er-4»	Pirani: No power supply, measurement element defective	Check supply and cable. Service gauge or replace it → [2], [3], [5]
	FullRange™ CC Gauge: No power supply	Check supply and cable

Error displayed	Possible cause	Acknowledgment/ correction
«Er-6»	Process Ion Gauge: No power supply, Pirani measurement element defective, Filament defective	Check supply and cable. Service gauge or replace it → [15]
«Er-9»	Cold Cathode Gauge: No power supply	Check supply and cable
«Er-11»	Cold Cathode Gauge: No power supply	Check supply and cable
«Er»	FullRange™ CC Gauge: Pirani measurement element defective	Service gauge or replace it → [11], [12], [13], [14]
	Linear Gauge: No power supply	Check supply and cable
«SE 1»	Line break in the connection cable to the gauge or the connection cable to the gauge has been detached during operation	Check the corresponding connection cable set point If the error has not been corrected: «noSE» or «no Id»
«dt»	Severe electric disturbance or error of the operating system (watchdog error)	set point [1]
	You have turned the unit back on too quickly after turning off	set point
«EE»	**EE**PROM error (parameter memory)	set point
«EP»	**EP**ROM error (program memory)	set point
«rA»	**RA**M error (random access memory)	set point
«Io»	Keyboard error	set point

[1] The error message is automatically acknowledged when this option is selected (→ 63).

Error displayed	Possible cause	Acknowledgment/ correction
«So»	Operating system error (stack overflow error)	set point
«tF»	Operating system error (task fail error)	set point
«Id»	Operating system error (idle error)	set point

9 Accessories

		Ordering number
19" rack frame DIN 41 494		BG 544 083 -T
Sensor cable for connection to Compact Gauge		
3 m	complete	BG 448 250 -T
6 m	complete	BG 448 251 -T
10 m	complete	BG 448 252 -T
other lengths on request		

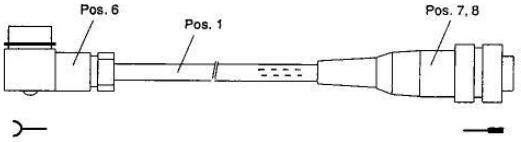

		Ordering number
Sensor cable for connection to Compact Gauge		
Pos. 1	Cable, 5 conductors plus screening, 0.25 mm² conductor	B 4590 198 BD
	Cable, 5 conductors plus screening, 0.34 mm² conductor	B 4590 198 CD
Pos. 6	Hirschmann line socket GO 6 WF, 6-pin, angular, female	B 4707 283 MA
Pos. 7	Connector Amphenol C91B, 6-pin, male	B 4722 126 CC
Pos. 8	Crimp contact (6 pieces required)	B 4722 841 CA

10 Spare parts

When ordering spare parts, always mention:

- all information on the nameplate
- description, and ordering number according to spare parts list

		Ordering number
Fuses F1, F2		
0.1 AT, 250 V, ø5x20 mm		B 4666 416
0.2 AT, 250 V, ø5x20 mm		B 4666 422
Connector Amphenol C91B, 7-pin, male	<control>	B 4722 107 CC
Connector Phoenix Combicon, 6-pin, female	<s>, <s>	B 4717 900 WE
Cable housing for Phoenix Combicon	<s>, <s>	B 4717 900 3E

11 Disposal

⚠ **Substances detrimental to the environment:**

Products, operating materials etc. may require disposal in accordance with special regulations.

After disassembling the product, separate its components according to their materials and recycle them.

Dispose of such products in accordance with the relevant local regulations.

Appendix

A: Adapting the equipment voltage; changing the fuses

Detach all cables (the power cable last) before opening the unit.

Tools / material required

- Screw driver No. 3
- Screwdriver for recessed-head screws No. 1
- Possibly two fuses (ratings → 44)

Procedure

- Remove the cover (eight screws all together).

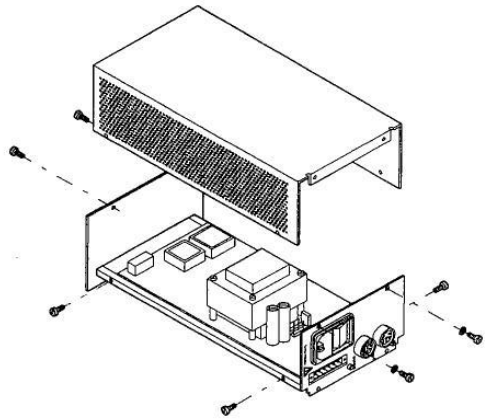

Adapting the equipment voltage:

- Set the jumper to the desired voltage
- Check the two fuses F1, F2 and replace them if necessary (ratings → 44)
- Change the voltage indication on the nameplate on the left side of the unit

Changing the fuses:

- Replace the two fuses F1, F2 (ratings → 44)

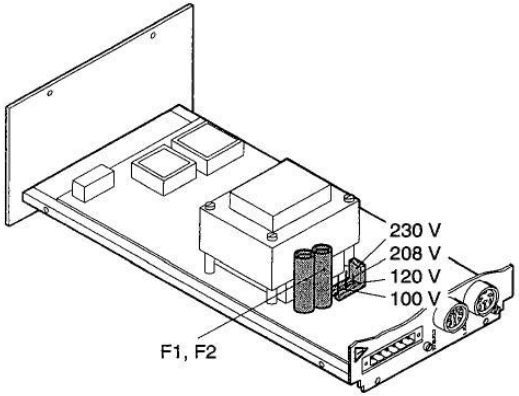

- Place the cover on the unit.
- Screw it on to the unit with the eight screws.

In order to ensure proper ground connection, use the two lock washers when reinstalling the back panel. Use the original screws only.

B: Dangerous voltages at the <s> connector

According to EN 61010, voltages above 30 V~ or 60 V= present a hazard of contact.

If such voltages are supplied to the <s> connector, the following instructions must be taken into consideration under any circumstances.

- The relevant rules and regulations for the respective application must be respected. In particular, conductors, insulation and fuses must be dimensioned correctly and mounted professionally.
- Depending on the voltage supplied, cables providing a double insulation must be used.
- The supplied connector is admitted for 250 V~. The enclosed cable housing must be used; however, it does not provide double insulation.
- Therefore, the current-carrying connector must be protected against accidental contact. This is achieved by installing the unit in a way that access to its back side (<s> connector) is only possible by means of a tool or a key.
- The connector must be screwed to the connector of the unit.
- The protective cover (e.g. door of the switch cabinet) must be marked with a corresponding warning sign.
- Before performing any work at the <s> connector, make sure it is idle.
- The <s> connector must not be supplied with a voltage presenting a hazard of contact and a protective low voltage at the same time.
- The current-carrying connector must not be accessible when withdrawn.

C: Test programs

Action	Keys	Result
Call in test mode	△ ▽ While turning the unit on until « bG » appears.	Unit is in test mode (Test ❶)
❶⇨❷⇨❸⇨... Next test	set point	
Quit test mode	2 s △ ▽ (or turning the unit off)	Unit returns to measurement mode

❶ Display program number		bG (light writing)
❷ Display test d I-t	△ Start, Stop	-.8.8.8.8 8.8.8.8 ⇨ 8.8.8.8
❸ RAM test rA-t	△ Start	run in test PASS passed Er error

BG 805 095 BE (9904) SingleGauge.om

❹ EPROM test EP-t	△ Start	run in test PASS passed Er error 8888 check sum
❺ EEPROM test EE-t	△ Start	PASS passed Er error
❻ A/D converter test Ad-0	△	8888 measured value [1]
Ad-1	△	8888 measured value [1]
Ad-2	△	8888 measured value [1]
Ad-3	△	8888 measured value [1]

[1] Displayed figure × 5 = voltage at the analog digital converter (mV)

BG 805 095 BE (9904) SingleGauge.om

❼ Relay resp. I/O test	⚠ The relays switch irrespective of the pressure. Remove any cables that may be connected to <s> Take the necessary safety measures when using this function for checking the current circuits connected (see also Appendix B).	
Io-t	△ Start / Stop	r 1-H...r4-L The 3 relays cyclically switch ON / OFF twice
r 1-H	▽	Switching contact <sensor> = ON
r 1-L	▽	Switching contact <sensor> = OFF
r3-H	▽	Error contact closed (no error)
r3-L	▽	Error contact open (error)
r4-H	▽	Supply contact <sensor> = ON
r4-L	▽	Supply contact <sensor> = OFF
INPUT PE-CTRL 1	HIGH level (≥ 2,0 V)	sen1
	LOW level (≤ 0,8 V)	sen1

❽ Watchdog error control		When error occurs: err
dt-c	△ on	Error contact = »open« Acknowledgment: set point
	△ oFF	Error contact = »open« 2 s Automatic acknowledgment of the display Error contact = »closed«

D: Literature

[1] Sales brochure
Compact Gauges
Vacuum measurement and control units
BG 800 316 PE
Balzers Instruments, FL-9496 Balzers, Liechtenstein

[2] www.bi.balzers.com/library
Operating manual
Compact Pirani Gauge TPR 250
BG 803 005 BE / D
Balzers Instruments, FL-9496 Balzers, Liechtenstein

[3] www.bi.balzers.com/library
Operating manual
Compact Pirani Gauge TPR 260 / 261
BG 803 015 BE / A
Balzers Instruments, FL-9496 Balzers, Liechtenstein

[4] www.pfeiffer-vacuum.de
Operating manual
Compact Pirani Gauge TPR 261
BG 805 175 BD
Pfeiffer Vacuum GmbH, D-35614 Asslar, Deutschland

[5] www.pfeiffer-vacuum.de
Operating manual
Compact Pirani Gauge TPR 265
BG 805 174 BE
Pfeiffer Vacuum GmbH, D-35614 Asslar, Deutschland

[6] www.bi.balzers.com/library
Operating manual
Compact Cold Cathode Gauge IKR 250
BG 803 006 BE / E
Balzers Instruments, FL-9496 Balzers, Liechtenstein

[7] www.pfeiffer-vacuum.de
Operating manual
Compact Cold Cathode Gauge IKR 251
BG 803 151 BE
Pfeiffer Vacuum GmbH, D-35614 Asslar, Deutschland

[8] www.bi.balzers.com/library
Operating manual
Compact Cold Cathode Gauge IKR 260
BG 803 007 BE / E
Balzers Instruments, FL-9496 Balzers, Liechtenstein

[9] www.pfeiffer-vacuum.de
Operating manual
Compact Cold Cathode Gauge IKR 261
BG 805 153 BE
Pfeiffer Vacuum GmbH, D-35614 Asslar, Deutschland

[10] www.pfeiffer-vacuum.de
Operating manual
Compact Cold Cathode Gauge IKR 270
BG 805 008 BE
Pfeiffer Vacuum GmbH, D-35614 Asslar, Deutschland

[11] www.bi.balzers.com/library
Operating manual
Compact FullRange™ Gauge PKR 250
BG 803 016 BE / C
Balzers Instruments, FL-9496 Balzers, Liechtenstein

[12] www.pfeiffer-vacuum.de
Operating manual
Compact FullRange™ CC Gauge PKR 251
BG 805 155 BE
Pfeiffer Vacuum GmbH, D-35614 Asslar, Deutschland

[13] www.bi.balzers.com/library
Operating manual
Compact FullRange™ Gauge PKR 260
BG 803 017 BE / A
Balzers Instruments, FL-9496 Balzers, Liechtenstein

[14] www.pfeiffer-vacuum.de
Operating manual
Compact FullRange™ CC Gauge PKR 261
BG 805 157 BE
Pfeiffer Vacuum GmbH, D-35614 Asslar, Deutschland

[15] www.pfeiffer-vacuum.de
Operating manual
Compact Process Ion Gauge IMR 260
BG 803 038 BE
Pfeiffer Vacuum GmbH, D-35614 Asslar, Deutschland

[16] Operating manual
Compact Capacitance Gauges ACR 261 / ACR 262 / ACR 263 / ACR 274
BG 803 011 BN
Balzers Instruments, FL-9496 Balzers, Liechtenstein

[17] www.pfeiffer-vacuum.de
Operating manual
Compact Capacitance Gauges CMR 261 / CMR 262 / CMR 263 / CMR 264 / CMR 271 / CMR 272 / CMR 273 / CMR 274 / CMR 275
BG 805 161 BE
Pfeiffer Vacuum GmbH, D-35614 Asslar, Deutschland

[18] www.pfeiffer-vacuum.de
Operating manual
Compact Piezo Gauge APR 250, APR 260, APR 262, APR 265, APR 266, APR 267
BG 805 035 BE
Pfeiffer Vacuum GmbH, D-35614 Asslar, Deutschland

E: Conversion of pressure units

	bar	mbar	µbar	Pa	kPa	Torr	mTorr [1]	psi
bar	1	10^3	10^6	10^5	10^2	750	750×10^3	14.5
mbar	10^{-3}	1	10^3	10^2	0.1	0.75	750	14.5×10^{-3}
µbar	10^{-6}	10^{-3}	1	0.1	10^{-4}	7.5×10^{-4}	0.75	14.5×10^{-6}
Pa	10^{-5}	10^{-2}	10	1	10^{-3}	7.5×10^{-3}	7.5	14.5×10^{-5}
kPa	10^{-2}	10	10^4	10^3	1	7.5	7.5×10^3	14.5×10^{-2}
Torr	1.33×10^{-3}	1.33	1.33×10^3	133	0.133	1	1000	19.3×10^{-3}
mTorr	1.33×10^{-6}	1.33×10^{-3}	1.33	0.133	1.33×10^{-4}	10^{-3}	1	19.3×10^{-6}
psi	6.89×10^{-2}	68.9	68.9×10^3	6890	6.89	51.7	51.7×10^3	1

[1] mTorr = micron = µ

PFEIFFER VACUUM

Declaration of Conformity

Product

TPG 251 A

Vacuum measurement and control unit
for Compact Gauges

SingleGauge™

EU Declaration of Conformity as defined by the listed Guidelines

We herewith declare that the products listed above comply with the provisions of the listed Guidelines.

Guidelines, harmonised standards, national standards in languages and specifications which have been applied:

73/23/EEC (7/93) .....

89/336/EEC (7/93) .....

EN 61010-1: 1993 .....

EN 50081-1: 1992 .....

EN 50082-2: 1994 .....

.....

Signature

Asslar, 3.5.1999

Wolfgang Dondorf
Managing director

PFEIFFER VACUUM

Pfeiffer Vacuum GmbH
Emmeliusstrasse 33
D–35614 Asslar
Deutschland
Tel +49 (0) 6441 802-0
Fax +49 (0) 6441 802-202
info@pfeiffer-vacuum.de

www.pfeiffer-vacuum.de

Original: German BG805 095 BD (9904)

Operating manual
incl. Declaration of conformity

PFEIFFER VACUUM

TPG 251 A

Vacuum measurement and control unit
for Compact Gauges

SingleGauge™

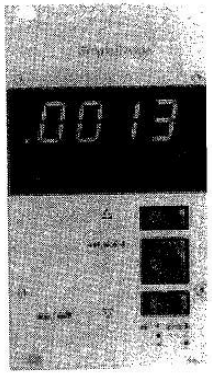

CE

BG 805 095 BE (9904)

PFEIFFER VACUUM

Short operating instructions
incl. Declaration of conformity

Compact FullRange™ Gauge
PKR 251

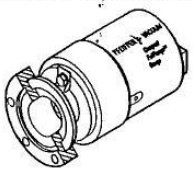

CE

BG 805 119 BN (9903)

Validity

PT R26 000 (DN 25 ISO-KF flange)
PT R26 001 (DN 40 ISO-KF flange)
PT R26 002 (DN 40 CF-F flange)

We reserve the right to make technical changes without prior notice.

About this document

These instructions describe the installation and operation of the above Compact FullRange™ Gauges. For further information please refer to the Operating manual 🕮 [1], which is separately available.

Intended use

The above Compact FullRange™ Gauges have been designed for vacuum measurement in the pressure range of 5×10^{-9} ... 1000 mbar.

Functional principle

The PKR 251 gauge consists of two separate measurement systems (Pirani and cold cathode system) the signals of which are combined in such a way that one uniform measurement signal is output.

Safety

Adhere to the applicable regulations and take the necessary precautions for the process media used.

Consider possible reactions with the product materials.

The custodian assumes the responsibility in conjunction with the process media used.

Pfeiffer Vacuum assumes no liability and the warranty becomes null and void if the custodian or third parties

- disregard the information in this document
- use the product in a non-conforming manner
- make any kind of changes (modifications, alterations etc.) to the product
- use the product with accessories not listed in the product documentation.

Installation

Flange connection

Note

Caution: vacuum component

Dirt and damages impair the function of the vacuum component.

When handling vacuum components, take appropriate measures to ensure cleanliness and prevent damages.

STOP DANGER

Caution: overpressure in the vacuum system > 1 bar

Inadvertent opening of clamps can result in injury due to catapulted parts.

Use the type of clamps which can only be opened and closed by means of a tool (e.g. hose clip clamping ring).

Electrically connect the gauge to the grounded vacuum chamber. This connection must conform to the requirements of a protective connection according to EN 61010:

- CF flanges fulfill this requirement
- For gauges with a KF flange, use a conductive metallic clamping ring.

When making a CF flange connection, it can be advantageous to temporarily remove the electronics (1) and the magnet unit (2) (→ 🕮 [1]).

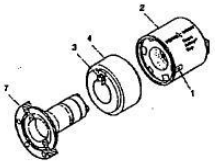

The gauge may be mounted in any orientation. However, it should be mounted so that any particles present cannot penetrate into the measuring chamber.

Electrical connection

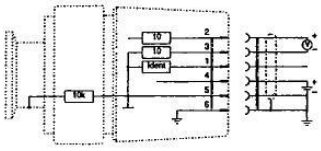

Figure 1: Electrical connection

Pin 1 identification
Pin 2 signal output (measuring signal)
Pin 3 signal common
Pin 4 supply
Pin 5 supply common
Pin 6 screening

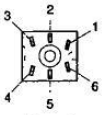

Connector, soldering side

Make sure the flange of the gauge is connected to the vacuum system (→ above).

If no connection cable is available, make a connection cable according to the above diagram.

Connect the gauge to the measurement unit.

Secure the connector on the gauge with a screw.

Operation

Put the measurement unit into operation. Allow for a stabilizing time of ≈ 10 minutes. Once the gauge has been switched on, permanently leave it on irrespective of the pressure:

- The Pirani measurement circuit is always on.
- The cold cathode measurement circuit is controlled by the Pirani circuit and is activated only at pressures

Gas type dependence

The measurement value depends on the type of gas being measured. The value displayed is accurate for dry air, N_2, O_2, and CO. It can be mathematically converted for other gases (→ Technical data).

If you are using a Pfeiffer Vacuum measurement unit, you can enter a calibration factor to correct the measurement value displayed.

Ignition delay

When cold cathode measurement systems are activated, an ignition delay occurs, which is typically:

10^{-5} mbar ≈ 1 second
10^{-7} mbar ≈ 20 seconds
5×10^{-9} mbar ≈ 2 minutes

As long as the cold cathode measurement circuit has not yet ignited, the measurement value of the Pirani is output as measuring signal ("Pirani underrange" is displayed for pressures $<5\times10^{-4}$ mbar).

Adjusting the gauge

The gauge is factory-calibrated. Readjustment or cleaning may become necessary because of use in different climatic conditions, aging, or contamination.

The cold cathode measurement circuit, which is dominant for low pressures ($<1\times10^{-3}$ mbar), is factory-calibrated. By way of contrast, the Pirani measurement circuit can be adjusted. Any adjustment has a negligible effect on the pressure range between approx. 10^{-2} mbar and 10^{2} mbar.

1. Put the gauge into operation (if possible, in the position, in which it will be used later on).
2. Evacuate the vacuum system to $p \ll 10^{-4}$ mbar, and then wait 10 minutes.
3. Turn the nameplate counter-clockwise until the mechanical stop is reached.
4. 

   While depressing the tactile switch with a cylindrical pin (ø ≈ 3 mm), adjust the <HV> potentiometer by means of a 1.5 mm screwdriver ...

   ... to 5×10^{-4} mbar

   

   After that, turn the potentiometer counter-clockwise by ≈ 120 °.

   or

   ... to 4.2 V.

   

5. Vent with air or nitrogen to atmospheric pressure and then wait 10 minutes.
6. Turn the nameplate clockwise until the mechanical stop is reached.
7. 

   Using the screwdriver, adjust the <ATM> potentiometer ...

   ... to 1×10^{3} mbar

   

   or

   ... to 8.6 V.

   

8. Turn the nameplate back to its original position (it will catch).

Technical data

Admissible temperatures	
Storage	-40 °C ... +65 °C
Operation	+ 5 °C ... +55 °C
Bakeout	150 °C (without electronics and magnetic shielding)
Relative humidity	max. 80% at temperatures ≤+31°C decreasing to 50 % at +40°C
Use	indoors only altitude up to 2000 m (6600 ft)
Measurement range (air, N_2)	5×10^{-9} ... 1000 mbar
Accuracy	≈ ± 30 % (in the range 1×10^{-8} ... 100 mbar)
Reproducibility	≈ ± 5 % (in the range 1×10^{-8} ... 100 mbar)
Type of protection	IP 40
Pressure max. (absolute)	10 bar limited to inert gases and temperatures <55°C
Materials exposed to the vacuum	
Flange	stainless steel
Measuring chamber	stainless steel
Feedthrough isolation	ceramic (Al_2O_3), glass
Internal seals	Viton
Anode	Mo
Ignition aid	stainless steel
Pirani measuring tube	Ni, Au
Pirani filament	W
Internal volume	≈ 20 cm³

Supply

STOP DANGER

The gauge may only be connected to supply or measurement units that conform to the requirements of a grounded protective extra-low voltage (SELV-E according to EN 61010). The connection to the gauge has to be fused[1].

Voltage at the gauge	15.0 ... 30.0 V= (max. ripple 1 V_{pp})
Power consumption	≤ 2 W
Fuse required[1]	≤ 1 AT

The n m voltage of the power supply unit must be increased proportionally to the length of the measuring cable.

Voltage at the supply unit with maximum cable length	16.0 ... 30.0 V= (max. ripple 1 V_{pp})
Electrical connection	
Cable	5 poles plus screening
Connection socket	Hirschmann GO 6 WF, 6 contacts, angled, female
Maximum cable length	75 m (0.25 mm² conductor) 100 m (0.34 mm² conductor) 300 m (1.0 mm² conductor)
Operating voltage in the measuring chamber)	≤ 3.3 kV
Operating current in the measuring chamber)	≤ 500 µA
Output signal (measuring signal)	
Voltage range	≈ 0 V ... ≈ +10.5 V
Relationship voltage-pressure	logarithmic increase 0.6 V / decade
Error signal	< 0.5 V no supply > 9.5 V Pirani sensor defective (filament break)
Output impedance	2x10 Ω
Minimum load	10 kΩ, short-circuit proof
Response time	pressure dependent
$p > 10^{-4}$ mbar	< 10 ms
$p = 10^{-4}$ mbar	≈ 1 s

Gauge identification	(pin 1)
$p > 10^{-2}$ mbar Pirani-only mode	11.1 kΩ resistor referenced to supply common
$p < 10^{-2}$ mbar Cold cathode not ignited Pirani-only mode	11.1 kΩ resistor referenced to supply common
Cold cathode ignited Combined Pirani-/cold cathode mode	9.1 kΩ resistor referenced to supply common
The following conditions must be fulfilled:	The polarity of pin 1 referenced to supply common is always positive.
Measurement with constant current	measurement current within range 0.2 ... 0.3 mA
with constant voltage	measurement voltage within range 2 ... 3 V
Grounding concept	→ Figure 1
Vacuum flange-measurement common	connected via 10 kΩ (max. voltage differential with respect to safety ±50 V respect to accuracy ±10 V)
Supply common-signal common	conducted separately; differential measurement recommended for cable lengths ≥ 6 m

Relationship measuring signal - pressure

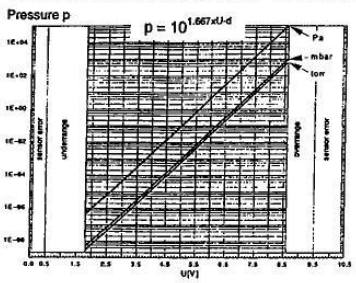

Measuring signal U [V]

	mbar	Pa	Torr
d	11.33	9.33	11.46

valid in the range: 5×10^{-9} mbar < p < 1000 mbar; 3.8×10^{-7} Torr < p < 750 Torr; 5×10^{-7} Pa < p < 1×10^{5} Pa

Gas type dependence

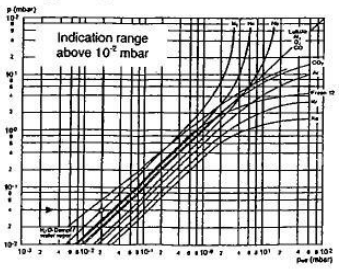

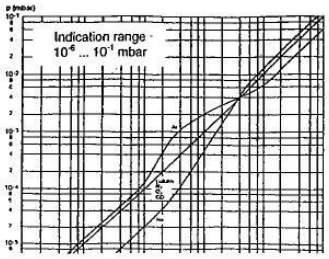

In the range below 10^{-5} mbar, the pressure indication is linear. For gases other than air, the pressure can be determined by means of a simple conversion formula:

p_{eff} = K × pressure indicated

Gas type	Air (N_2, O_2, CO)	Xe	Kr	Ar	H_2	Ne	He
K (mean values)	1.0	0.4	0.5	0.8	2.4	4.1	5.9

Maintenance, Troubleshooting

→ 🕮 [1]

If the gauge is operated under high pressures or under dirty conditions, it must be regularly cleaned.

Gauge failures due to contamination are not covered by the warranty.

Decommissioning

For environmentally compatible disposal, please contact your nearest Pfeiffer Vacuum Service Center.

Further information

🕮 [1] www.pfeiffer-vacuum.de
Operating manual PKR 251
BG 805 155 BE

PFEIFFER VACUUM

Declaration of conformity

Compact FullRange™ Gauge
Viton sealed
PKR 251

EU Declaration of Conformity as defined by the listed Guidelines

We herewith declare that the above product complies with the provisions of the listed Guidelines.

Guidelines, harmonised standards, national standards in languages and specifications which have been applied:

73/23/EEC (7/93) .....
89/336/EEC (7/93) .....
EN 61010-1: 1993 .....
EN 50081-1: 1992 .....
EN 50082-2: 1994 .....
.....

Signature

Asslar, 30.3.99

Wolfgang Dondorf
Managing director

Pfeiffer Vacuum GmbH
Emmeliusstrasse 33
D-35614 Asslar

SCHWILLE ELEKTRONIK

Technical Description DPM 635

Technical data

Digital display	:	3 1/2 Digit with red LED 12.5 mm, automa. initial point and alternation of polarity
Sample rate	:	2.5 per sec.
Decimal point	:	eligiable
Rack	:	ABS composition black material
Common mode input voltage	:	electrically isolated
Overload protection voltage	:	10 x range, max. voltage <250 V
Overload protection current	:	2 x range
Voltage supply	:	230 V 50-60 Hz 3 VA
Common mode rejection	:	CMRR > 80 dB
Working temperatur range	:	-10....+50°C
Feed temperatur	:	-20°C..+70°C
Insulation against safeguard (DIN 40050)	:	IP 50 front panel IP 00 back panel
Receptale	:	clamping
Front panel cutout	:	HxB 44.5 x 90.5
Build-in deep	:	T = 115 mm

Dimension of rack

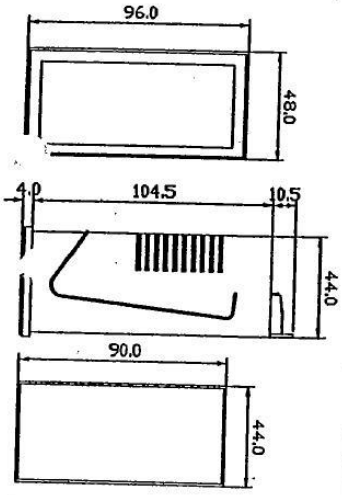

Range and connection

You see measuring range and power supply on the label of the rack. The instruments are secondly tested and kalibrated. Decimal point are setting on range. Scalefaktor is adjustable by P1 (+- 20% from final value). Only for DPM 635 VDC/VAC/ DC/AAC, not for converter.

Set decimal point
Set decimal point by jumper.

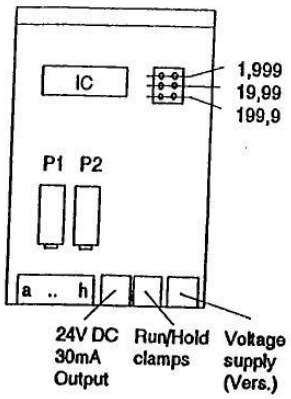

DC voltage Type 635-001..635-006
Digital instrument with -/+ range -1999 to +1999 Digits. Accuracy 0.1% +-1 Digit from input range. Screw terminals for input signal a (- input) and b (+ input). Voltage supply on screw lug Vers.

AC voltage Type 635-011.. 635-016
Digital instrument with integrated true RMS. Display kalibrated in Ueff. Frequency range DC to 50 kHz. Accuracy +-0.5% +-2 Digit from input range. Screw terminals for input signal a (- input) and b (+ input). Voltage supply on screw lug Vers.

DC current Type 635-020.. 635-025
Digital instrument with -/+ range -1999 to +1999 Digits. Accuracy 0.2% +-1 Digit from input range. Intern voltage drop max. 200mV. With extern shunt use 200mV range with eligiable decimal point. Shunt 20A/200mV set decimal point 19.99. Screw terminals for input signal a (- input) and b (+ input). Voltage supply on screw lug Vers.

AC current Type 635-030.. 635-035
Digital instrument with integrated true RMS. Display kalibrated in Ieff. Frequency range DC to 50 kHz. Accuracy 0.5% +-2 Digit from input range. Intern voltage drop max. 200mV. With extern shunt use 200mV range with eligiable decimal point. Shunt 20A/200mV set decimal point 19.99. Screw terminals for input signal a (- input) and b (+ input). Voltage supply on screw lug Vers.

VDC/ VAC/ ADC/ AAC

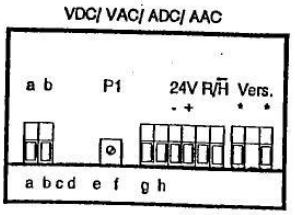

PT 100 temperature 2-wire
Type 635-050 ..635-051
Digital instrument for PT 100 sensor (DIN 43 760). 10 Ohm wire resistance is kalibrated and can trimming by resistor P2. Measuring current approx. 1.5 mA. Accurancy class 0.1% +-1 Digit from input range. Range B1: -100.0°C..+199.9°C. Resolution 0.1K. Range B2: -100°C .. +750°C. Resolution 1K. Sensor screw lug b, c. Voltage supply screw lug Vers. Analog output (1mV/°C) screw lug g(- output) and h(+ output).

PT 100 2-wire

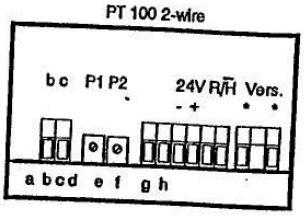

PT 100 temperature 3-wire
Type 635-054 .. 635-055
Digital instrument for PT 100 sensor (DIN 43 760). Wire resistance automatically kalibrated. Measuring current approx. 1.5 mA. Accurancy class 0.1% +-1 Digit from input range. Range B5: -150.0°C..+199.9°C. Resolution 0.1K. Range B6: -150°C .. +750°C. Resolution 1K. Sensor screw lug a, c and d. Voltage supply screw lug VERS. Analog output (1 mV/°C) screw lug g(- output) and h(+ output).

PT 100 3-wire

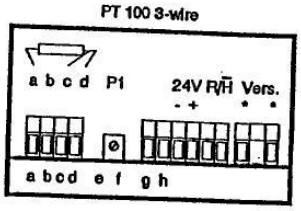

PT 100 temperature 4-wire
Type 635-052.. 635-053
Digital instrument for PT 100 sensor (DIN 43 760). Wire resistance automatically kalibrated. Measuring current approx. 1.5 mA. Accurancy class 0.1% +-1 Digit from input range. Range B3: -150.0°C..+199.9°C. Resolution 0.1K. Range B4: -150°C .. +750°C. Resolution 1K. Sensor screw lug a, b, c and d. Voltage supply screw lug Vers. Analog output (1 mV/°C) screw lug g(- output) and h(+ output).

PT 100 4-wire

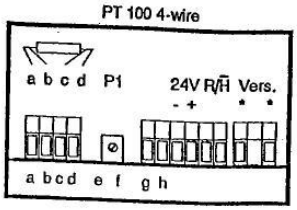

NiCrNi temperature Type 635-060..635-061
Digital instrument with thermocouple NiCrNi sensor (DIN 43 710) with compensation intern. Accurancy class 0.1% +-4 Digit from input range. Range B1: 0°C .. +199.9°C. Resolution 0.1K. Range B2: 0°C .. +1300°C. Resolution 1K. Sensor input on screw lug c (red wire) and d (green wire). Voltage supply on screw lug Vers. Analog output (1mV/°C) on screw lug g (- output) and h (+output).

NiCrNi

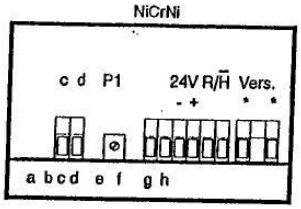

FeCuNi temperature Type 635-070
[illegible]al instrument with thermocouple FeCuNi sen- [illegible] DIN 43 710) with compensation intern. Accurancy class 1.5% +-4 Digit from input range. Range B1: -50°C .. +600°C. Resolution 1K. Sensor input on screw lug c (red wire) and d (blue wire). Voltage supply on screw lug Vers. Analog output (1mV/°C) on screw lug g (- output) and h (+output).

FeCuNi

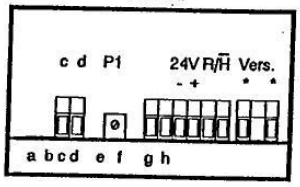

Special measuring range
Type 635-008..009 and 635-027..029
The digital display is proportinally to a standard voltage or current signal. The range is opposed to c[illegible]mer wish and with or without 0-dotted shift a[illegible]diced on rack. Measuring input on screw lug a (-input) and b (+input). Voltage supply on screw lug Vers. Typ 635-008/0-10V, accurancy class 0,1%+-1 Digit from input range, display range 0 .. customer wish. Typ 635-009/0-10V, accurancy class 0,1%+-1 Digit from input range, display range -customer wish..+customer wish. Typ 635-027/0-20mA, accurancy class 0,2%+-1 Digit from input range, display range 0..customer wish. Typ 635-028/0-20mA, accurancy class 0,2%+-1 Digit from input range, display range -customer wish.. +customer wish. Typ 635-029/4-20mA, accurancy class 0,2%+-1 Digit from input range, display range -customer wish.. +customer wish.

Special measuring range

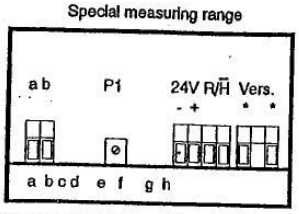

[illegible]esistance measurement Type 635-040
[illegible]igital instrument with the range 200 Ohm - 20 [illegible]Ohm. 4-wire measurement < 200 Ohm with [illegible]ccurancy class 0.5% +-1 Digit from input range. [illegible]easuring resistor connected by screw lug e-f [illegible]nd g-h. 2-wire measurement >= 2kOhm with

Resistance measurement

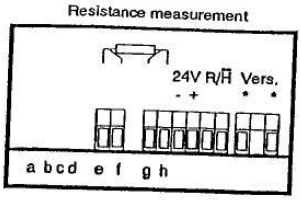

Distance measurement Type 635-007
Measurement with adjustable resistor 0-5 kOhm or 0-10 kOhm. Measuring voltage included in the racket. On the back panel are three adjustable resistor for resolution (P4) and for start of range (P5) and for end of range (P6). Measuring resistor connected by screw lug f and h, with variable connect on lug g. Voltage supply on screw lug Vers.

Distance measurement

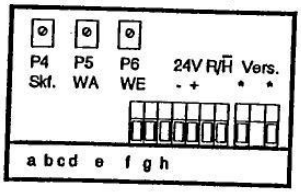

Frequency Type 635-080 .. 635-083
The digital display is proportinally to a frequency signal. Linearity error < 1% (with TK < 25 ppm). The input signal voltage must between TTL pegel and 40 V. Higher voltage input is possible. Signal input on screw lug c (-input) and d(+input). Supply voltage on screw lug Vers.

Rotation Type 635-085
The digital display is proportinally to a rotation signal. Linearity error < 1% (with TK < 25 ppm). The input signal voltage must between TTL pegel and 40 V. Higher voltage input is possible. Signal input on screw lug c (-input) and d (+input). Supply voltage on screw lug Vers.

Frequency and rotation

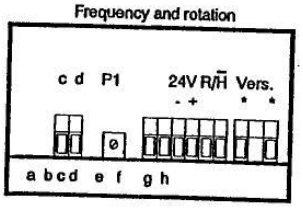

Option BCD output Type 635-100
on the back panel.
Connection:

1	Ground
2	Ground
3	Digit 1 D
4	Digit 1 C
5	Digit 1 A
6	Digit 1 B
7	Digit 2 D
8	Digit 2 C
9	Digit 2 A
10	Digit 2 B
11	Digit 3 D
12	Digit 3 C
13	Digit 3 B
14	Digit 3 A
15	Digit 4 A
16	Sign

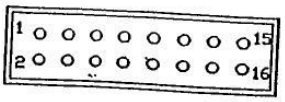

Voltage supply for sensors electrically isolated 24 V DC 30 mA clamping on i (- DC) and j(+ DC).

Run/Hold function is aktiv, when Run/Hold clamps are bridging.

Option RS 232 output Type 635-120
RS 232 output to connected 64 units and a PC by two wire.

Option Dimension on display Type 600-900
The shape are behind the front panel with a film negativ on a luminous field.

Option AC supply Type 600-104/107
Common mode and input voltage electrically isolated. Without 24 V DC output.

600-104	240 V AC
600-105	115 V AC
600-106	42 V AC
600-107	24 V AC

Option DC/DC converter Type 600-521/523
Common mode and input voltage electrically isolated. Without 24 V DC output.

600-521	4,75 .. 5,50 V
600-522	9,00 .. 18,00 V
600-523	18,00 .. 36,00 V

Safety Standard
The need to require formal qualification of personal performing certain spezialized operations, processes, tests or inspections should be evaluated and implemented where necessary. DIN and VDE Standards are observe.

Warrenty
All products manufactured and sold by Schwille Elektronik GmbH in the Federal Republic of Germany are warranted to the original purchaser from date of shipment for 6 months. Schwille Elektronik GmbH products are warranted to conform to the applicable published specifications in effect at the time of the shipment, and to be free from any defects in material or manufacture when used with recommended associated equipment and/or supplies. All products are be returned transportation prepaid by the buyer to Schwille Elektronik GmbH service center. Schwille Elektronik GmbH reserves the right to determine the cause and existence of a defect under this warranty and this warranty shall not apply to any products which have been subjected to misuse, improper installation, repair, alternation, neglect, accident, inundation, fire or operation outside their maximum ratings. Schwille Elektronik GmbH liability under such warranty is limited to servicing or replacing defective parts except fuses, batteries,... and does not include calibration. In no event shall be liable for any loss of profits or other contigent, consequential or special damages. The foregoing warranty is exclusive and expressly in lieu of all other warranties wether expressed or implied, including any implied warranties of merchantability or fitness and of any other obligation and shall constitute the sole remedy of the buyer and sole liability of Schwille Elektronik GmbH.

Support
Schwille Technical Support are as close as your telephone to answer any question you have.

PFEIFFER VACUUM

TMH 071 P / TMU 071 P

Turbomolekular-Drag-Pumpe mit Antriebselektronik TC 600

Turbomolecular Drag Pumps With Electronic Drive Unit TC 600

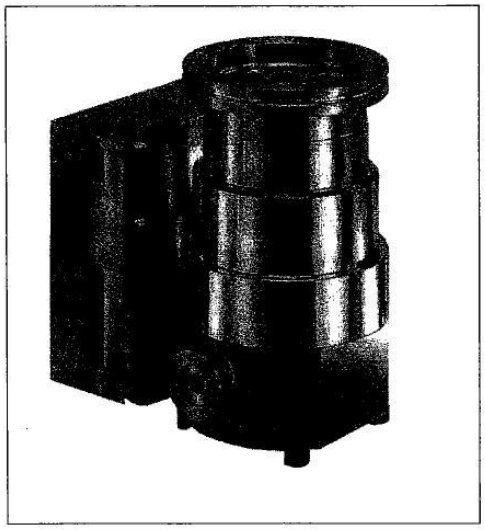

CE

Inhalt

Hinweis! Aktuelle Betriebsanleitungen sind auch über www.pfeiffer-vacuum.de unter "Infoservice" verfügbar.

1. Wichtig für Ihre Sicherheit

☞ Lesen und befolgen Sie alle Punkte dieser Anleitung.
☞ Informieren Sie sich über:
  – Gefahren, die von der Pumpe ausgehen,
  – Gefahren, die von Ihrer Anlage ausgehen,
  – Gefahren, die von gepumpten Medien ausgehen.
☞ Verhindern Sie, daß ein Körperteil dem Vakuum ausgesetzt wird.
☞ Beachten Sie die Sicherheits- und Unfallverhütungsvorschriften.
☞ Prüfen Sie regelmäßig die Einhaltung aller Schutzmaßnahmen.
☞ Turbopumpe nicht mit offenem HV-Flansch betreiben.
☞ Turbopumpe mit TC 600 nicht eigenmächtig umbauen oder verändern.
☞ Beim Einsenden der Turbopumpe Versandhinweise beachten.
☞ Verwenden Sie mindestens 4 Klammerschrauben zum Anschluß des HV-Flansches (ISO-Flansch).
☞ Die Befestigung der Turbopumpe muß lt. Installationsvorschriften erfolgen.
☞ Während des Betriebs Stecker zwischen TC 600 und Zubehörteilen nicht lösen.
☞ Bei offener Turbopumpe, TC 600 elektrisch von der Versorgungsspannung trennen.
☞ Bei Arbeiten an der Turbopumpe, HV-Flansch erst nach Stillstand des Rotors öffnen.
☞ Bei Verwendung von Sperrgas, Druck in der Schlauchverbindung durch Überdruckventil auf 2 bar begrenzen.
☞ Bei Verwendung einer Heizung können im Bereich des Hochvakuumflansches Temperaturen bis 120 °C auftreten. Vorsicht Verbrennungsgefahr!
☞ Im Bereich des Unterteils der Turbopumpe können während des Betriebs Temperaturen bis 65 °C auftreten. Vorsicht Verbrennungsgefahr!
☞ Leitungen und Kabel von heißen Oberflächen (> 70 °C) fernhalten.
☞ Turbopumpe mit TC 600 nur mit zugehörigem Netzteil (Zubehör) betreiben.
☞ Gerät hat Schutzart IP 30. Bei Einbau in Umgebungen die andere Schutzarten verlangen sind entsprechende Maßnahmen zu ergreifen. Für das TC 600 kann mit dem Nachrüsten einer Abdeckung (Zubehör) die Schutzart IP 54 erreicht werden.
☞ Über den Netzanschluß muß immer eine sichere Verbindung zum Schutzleiter (PE) gewährleistet sein (Schutzklasse I).
☞ Werden Turbopumpe und TC 600 getrennt voneinander betrieben (nur nach Absprache mit dem Hersteller zulässig), so muß die Turbopumpe mit dem Schutzleiter (PE) verbunden werden.
☞ Bei Erdschluß der Betriebsspannung (rote LED blinkt) muß dieser beseitigt werden, da sonst die Gefahr eines elektrischen Schlages besteht.

Änderungen vorbehalten.

1.1. Zu Ihrer Orientierung

Auf der Seite 21 dieser Anleitung finden Sie eine Zeichnung mit Anschlußmöglichkeiten des Netzteils und des Zubehörs.

Anweisung im Text
➡ Arbeitsanweisung: Hier müssen Sie etwas tun.

Verwendete Symbole
Die folgenden Symbole werden auf den folgenden Abbildungen einheitlich verwendet:

Ⓗ Hochvakuumflansch
Ⓥ Vorvakuumflansch
Ⓕ Flutanschluß
Kühlwasseranschluß
Luftkühlung
Elektroanschluß
Ⓖ Sperrgasanschluß

Verwendete Abkürzungen
DCU = Bedien- und Anzeigeeinheit
TC = Antriebselektronik Turbopumpe
TPS = Netzteil

Positionsnummern
Gleiche Pumpen- und Zubehörteile haben in allen Abbildungen die gleichen Positionsnummern.

1.2. Piktogramm-Definition

Verbrennungsgefahr beim Berühren heißer Teile.

Gefahr eines elektrischen Schlages.

Gefahr von Personenschäden.

Gefahr von Schäden an der Pumpe oder an der Anlage.

Verletzungsgefahr durch rotierende Teile.

2. Kennenlernen der Pumpen TMH 071 P/TMU 071 P

2.1. Hauptmerkmale

Die Turbopumpen TMH 071 P/TMU 071 P mit TC 600 bilden eine komplette Einheit. Die Spannungsversorgung erfolgt über ein Netzteil (siehe Zubehör).

Die Turbomolekular-Drag-Pumpe TMH/U 071 P

1 Hochvakuumflansch
2 Vorvakuumflansch
4 Flutschraube
6 Gummifuß
8 Antriebselektronik TC 600

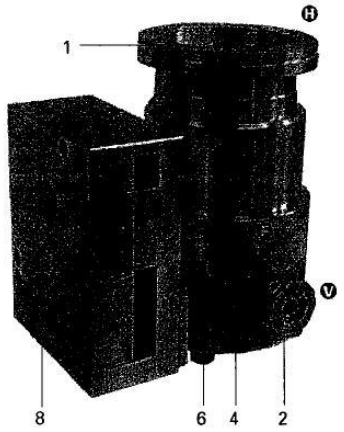

Kühlung
- Verstärkte Konvektionskühlung mit Kühlkörper (Zubehör),
- Luftkühlung (Zubehör) oder
- Wasserkühlung (Zubehör).

Eingebaute Schutzmaßnahme bei Übertemperaturen: Antriebselektronik TC 600 regelt Rotordrehzahl zurück.

Lager
Hochvakuumseite: verschleißfreies Permanentmagnet-Lager.
Vorvakuumseite: ölumlaufgeschmiertes Kugellager mit Keramikkugeln.

Bestimmungsgemäße Verwendung
- Die Turbomolekularpumpe TMH 071 P/TMU 071 P darf nur zur Vakuumerzeugung eingesetzt werden.
- Mit den Turbopumpen dürfen nur solche Medien gepumpt werden, gegen die sie chemisch beständig sind. Bei anderen Medien müssen die Pumpen für diese Prozesse durch den Anwender qualifiziert werden.
- Bei Anfall von Prozeßstaub sind prozeßabhängige Wartungsintervalle festzulegen und es ist Sperrgas zu verwenden.
- Die Turbopumpe muß an eine Vorvakuumpumpe nach Abschnitt 3.3. angeschlossen sein.
- Zum Betrieb des TC 600 dürfen nur PFEIFFER Netzteile verwendet werden. Diese Netzteile garantieren eine vom Netz sicher getrennte Spannung nach Norm EN 60 742. Verwendung anderer Netzteile nur mit ausdrücklicher Zustimmung des Herstellers.
- Einsatz der Pumpen nur bei Einhaltung der Umgebungsbedingungen nach Schutzart IP 30.

Nicht bestimmungsgemäße Verwendung
Als nicht bestimmungsgemäß gilt u. a.:
- Das Pumpen von korrosiven oder explosiven Gasen,
- das Einsetzen der Pumpe in explosionsgefährdeten Bereichen,
- das Pumpen von Gasen und Dämpfen, die die Materialien der Pumpe angreifen,
- das Pumpen von korrosiven Gasen ohne Sperrgas,
- das Pumpen von kondensierenden Dämpfen,
- der Betrieb mit unzulässig hohen Gaslasten,
- der Betrieb mit falschen Gas-Mode,
- der Betrieb mit einer zu hohen eingestrahlten Wärmeleistung (siehe 9. Technische Daten),
- der Betrieb ohne Kühleinrichtung,
- der Einsatz in Umgebungen die eine Schutzart besser IP 30 verlangen,
- das Verwenden von anderen Netz- und Zubehörteilen, die nicht in dieser Anleitung genannt werden oder mit dem Hersteller nicht abgesprochen wurden.
- Anschluß an Netzteile mit Erdung eines Pols der Gleichspannung.

Bei nicht bestimmungsgemäßem Einsatz erlischt jeglicher Haftungs- und Gewährleistungsanspruch.

2.2. Unterschiede zwischen den Pumpentypen

Merkmal	TMH 071 P	TMU 071 P
HV-Flansch	ISO-KF / ISO-K	CF-F
HV-Dichtung	Viton	Metall
Erreichbarer Enddruck	$< 1 \cdot 10^{-8}$ mbar (ohne Ausheizen)	$< 5 \cdot 10^{-10}$ mbar (mit Ausheizen)

Abkürzungen auf dem Typenschild der Turbopumpe
Zusatz **"P"**: Sperrgasanschluß zur Verhinderung des Eindringens aggressiver Gase in den Motor- und Lagerraum.

3. Installation

3.1. Hinweise vor der Installation

Keine eigenmächtigen Umbauten und Veränderungen an der Turbopumpe vornehmen.

- Die maximal zulässige Rotortemperatur der Pumpe ist 80 °C. Wird der Rezipient geheizt oder werden Teile im Rezipienten bei hoher Temperatur betrieben sind gegebenenfalls geeignete Abschirmbleche in den Rezipienten vor die Turbopumpe einzubauen (konstruktive Hinweise auf Anfrage).
- Blindflansche von Hoch- und Vorvakuumseite erst unmittelbar vor dem Anschließen entfernen!
- Der Schmiermittelspeicher ist bei den Turbopumpen TMH 071 P/TMU 071 P bereits fertig montiert und gefüllt.
- Bei Magnetfeldern > 4 mT muß eine geeignete Abschirmung verwendet werden (auf Anfrage)!
- Wird die Pumpe ausgeheizt, müssen die Heizmanschette und der Pumpenkörper gegen Berührung geschützt werden.
- Im Falle eines plötzlichen Rotorstillstandes können Drehmomente bis 330 Nm auftreten, die von der Turbopumpe und dem Rahmen aufgefangen werden müssen.
  Die Pumpen müssen wie folgt befestigt werden:
  - ISO-Flansch mit 4 Klammerschrauben oder
  - CF-Flansch mit der vollständigen Anzahl Schrauben M8 oder
  - Pumpenunterseite mit 4 Schrauben M5, Schraubengüte 8.8.
- Zum Betrieb der Pumpe ist Luft oder Wasserkühlung erforderlich. Bei Betrieb mit Konvektionskühlung ist der Kühlkörper zu verwenden (siehe Zubehör).

3.2. Pumpe montieren, Hochvakuumseite anschließen

Wichtig!
Größte Sauberkeit beim Montieren aller Hochvakuum-Teile! Unsaubere Bauteile verlängern die Auspumpzeit!

Splitterschutz verwenden
Ein Splitterschutz im Hochvakuumflansch schützt die Turbopumpe vor Fremdkörpern aus dem Rezipienten, reduziert aber das Saugvermögen der Pumpe um ca. 15 %.
Montage: siehe „Splitterschutz montieren".

Die Hochvakuumseite kann entweder direkt oder über einen Federungs- oder Dämpfungskörper (Zubehör) an den Rezipienten angeflanscht werden.

Anschluß über Federungskörper
Wird die Hochvakuumseite über einen Federungskörper angeflanscht, muß die Turbopumpe z.B. an den Bohrungen an der Unterseite der Pumpe (siehe Maßbild) befestigt werden. Die Befestigung muß das unter 3.1. genannte Drehmoment auffangen können.

Anschluß über Dämpfungskörper
Bei Einsatz eines Dämpfungskörpers kann die Turbopumpe freihängend an den Rezipienten angeflanscht werden. Eine zusätzliche Befestigung ist nicht erforderlich.

Die maximal zulässige Temperatur am Dämpfungskörper beträgt 100 °C.

Pumpe direkt anflanschen

Zulässige Einbaulagen der Turbopumpe

11 Rezipient

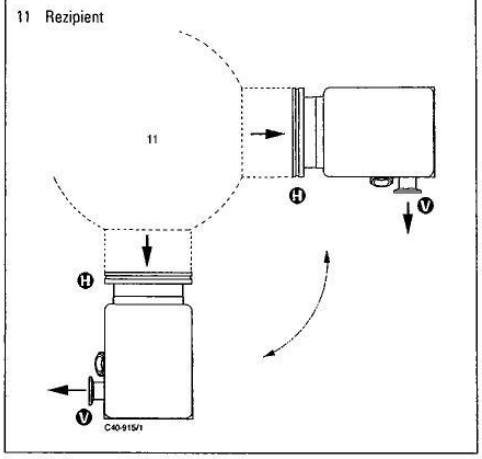

Axiale Belastbarkeit des Hochvakuumflansches: max. 200 N (entspr. 20 kg).
Keine einseitige Belastung am Hochvakuumflansch!

Bei waagerechter Montage der Turbopumpe und ölgedichteter Vorvakuumpumpe (z.B. Drehschieberpumpe): Vorvakuumflansch der Turbopumpe muß senkrecht nach unten weisen (Abweichung max. ± 20°). Andernfalls kann die Turbopumpe verunreinigt werden.

Einbaulage mit ölgedichteter Vorpumpe

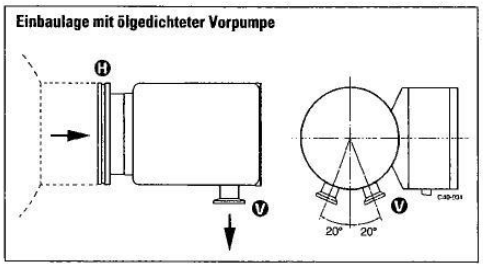

Bei verankerter Turbopumpe dürfen keine Kräfte aus dem Rohrleitungssystem auf die Pumpe einwirken.
Alle Rohrleitungen vor der Pumpe abstützen oder abhängen.

Splitterschutz montieren

Splitterschutz so in den Hochvakuumflansch einsetzen, daß die Wölbung des Siebes nach außen zeigt.

- ➡ Klemmfahnen 12a leicht nach außen biegen, damit der Splitterschutz 12 später fest im Hochvakuumflansch sitzt (Vermeidung von Geräuschen).
- ➡ Splitterschutz in den Hochvakuumflansch einsetzen, dabei Klemmfahnen etwas nach innen drücken.
- ➡ Außenring des Splitterschutzes bis zum Anschlag in den Hochvakuumflansch eindrücken.

Einsetzen des Splitterschutzes

12 Splitterschutz
12a Klemmfahne

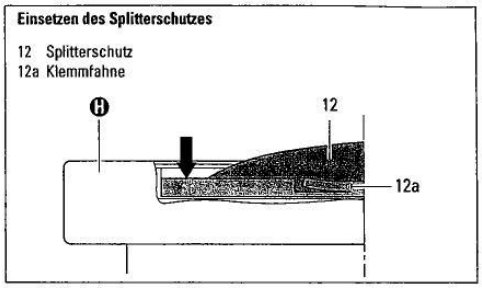

3.3. Vorvakuumseite anschließen

Vorvakuumpumpe:	Vorvakuumdruck ≤ 10 mbar; bei verstärkter Konvektionskühlung < 0,1 mbar.
Empfehlung:	Ölfreie Membranpumpe oder Drehschiebervakuumpumpen aus dem PFEIFFER-Programm (Einbaulage Turbopumpe beachten, siehe Abschnitt 3.2.).

Vorvakuumpumpe anschließen

Alle Verbindungen der Vorvakuumleitung: Mit üblichen Kleinflansch-Bauteilen oder Schlauchverschraubungen.

Gasausstoß der Vorpumpe sicher ableiten!
Freien Querschnitt des Vorvakuumflansches nicht durch nachfolgende Bauteile einengen!

Die ausgestoßenen Prozeßgase und -dämpfe können gesundheitsschädigend und umweltverschmutzend sein.
Alle Sicherheitsempfehlungen des Gasherstellers beachten.

- ➡ Bei starren Rohrverbindungen: Federungskörper zur Dämpfung von Vibrationen in die Verbindungsleitung einbauen.
- ➡ Der elektrische Anschluß der Vorvakuumpumpe erfolgt über eine Relaisbox. Die Steuerleitung an der Relaisbox in das TC 600 am Anschluß "FV PUMP" einstecken.

Einzelheiten zur Relaisbox Vorvakuumpumpe und deren Installation siehe Betriebsanleitung PT 000 000 BN

3.4. Kühlung anschließen

Die Turbopumpen TMH 071 P/TMU 071 P sind wahlweise mit verstärkter Konvektionskühlung, Luft- oder Wasserkühlung zu versehen.
Bei erhöhtem Vorvakuumdruck (> 2 mbar) und/oder Betrieb mit Gaslasten sind die Turbopumpen mit Luft- oder Wasserkühlung zu betreiben.

Einsatz und Installation:
- Wasserkühlung siehe Betriebsanleitung PM 800 546 BN
- Luftkühlung siehe Betriebsanleitung PM 800 543 BN
- Kühlkörper bei Konvektionskühlung (Einbaulagen siehe unter 9.1. Maßbild)

3.5. Flutventil anschließen

Das Flutventil (Zubehör) dient zum automatisches Fluten bei Abschaltung und Stromausfall.

Montage des Flutventils
- ➡ Flutschraube aus dem Flutanschluß der Turbopumpe herausschrauben.
- ➡ Flutventil 42 mit Dichtung (USIT-Ring) an Sechskant SW 14 einschrauben.

Elektrischer Anschluß
- ➡ Steuerleitung 42a in den Anschluß "VENT" des TC 600 (8) an der Turbopumpe einstecken.

Der Flutmodus des Flutventils ist über DCU oder Schnittstelle RS 485 wählbar.

Flutventil anschließen

8 Antriebselektronik TC 600
42 Flutventil
42a Steuerleitung Flutventil/TC 600
42b Stecker

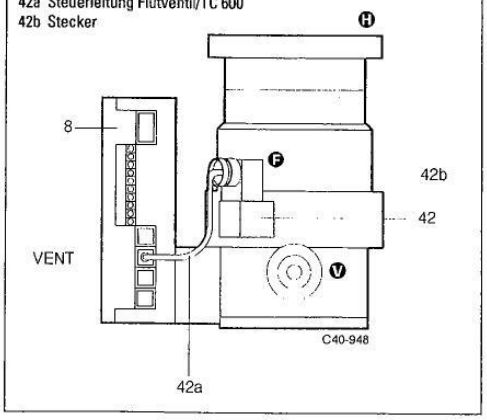

Maximaler Druck am Flutventil: 1,5 bar absolut.

Weitere Einzelheiten zum Flutventil TVV 005 siehe

3.6. Gehäuseheizung anschließen

Um den Enddruck schneller zu erreichen, können Turbopumpe und Rezipient ausgeheizt werden.
Die Heizdauer ist abhängig vom Verschmutzungsgrad und dem gewünschten Enddruck. Die Heizdauer sollte mindestens 4 Stunden betragen.

Hinweis:
Beim Einsatz einer Gehäuseheizung muß die Turbopumpe wassergekühlt werden.

Beim Ausheizen der Turbopumpe entstehen hohe Temperaturen.
Verbrennungsgefahr beim Berühren heißer Teile, auch noch nach dem Abschalten der Gehäuseheizung.
Heizmanschette und Pumpengehäuse möglichst bei der Installation thermisch isolieren! Heizmanschette und Pumpengehäuse Ausheizen nicht berühren.

Einzelheiten zur Gehäuseheizung und deren Installation siehe Betriebsanleitung PM 800 542 BN.

3.7. Antriebselektronik TC 600 anschließen

Hinweis:
Turbopumpe und Antriebselektronik TC 600 sind immer fest miteinander verbunden und bilden eine Einheit.
Das Verbindungskabel 8a ist separat zu bestellen (siehe Zubehör).

- ➡ Stecker X4 am Verbindungskabel 8a in den Anschluß X4 am TC 600 einstecken und mit Schraube 8b befestigen.
- ➡ Stecker X2 am Verbindungskabel 8a mit dem Netzteil TPS 100/DCU 100 (Zubehör) am Anschluß X2 verbinden.

Nach Anlegen der Betriebsspannung führt das TC 600 einen Selbsttest zur Überprüfung der Versorgungsspannung durch. Die Versorgungsspannung für die Turbomolekularpumpen TMH 071 P/TMU 071 P beträgt 24 VDC ±5% nach Norm EN 60 742.

3.8. Netzteil installieren

Zur Spannungsversorgung dürfen nur PFEIFFER Netzteile (Zubehör) verwendet werden. Diese Netzteile garantieren eine vom Netz sicher getrennte Spannung (nach Norm EN 60 742). Verwendung anderer Netzteile nur nach ausdrücklicher Zustimmung des Herstellers.

Einzelheiten zum Netzteil TPS 100 siehe Betriebsanleitung PM 800 521 BN.

3.9. Sperrgasventil anschließen

Zum Schutz der Turbopumpe, insbesondere bei korrosiven und staubbehafteten Prozessen, ist es erforderlich, diese mit Sperrgas zu betreiben. Der Anschluß erfolgt über ein Sperrgasventil (siehe Zubehör).
Sperrgasanschluß siehe unter 9.1. Maßbild.

Die Installation des Sperrgasventils und das Einstellen der Sperrgasmenge sind der Betriebsanleitung PM 800 229 BN zu entnehmen.

TC 600 mit Netzteil TPS 100/DCU 100 verbinden

X1 Netzanschluß
X2 Anschluß Netzteil
X4 Anschluß TC 600
S1 Schalter EIN/AUS
8 Antriebselektronik TC 600
8a Verbindungskabel TC 600 - TPS/DCU
8b Schraube
105 Netzteil

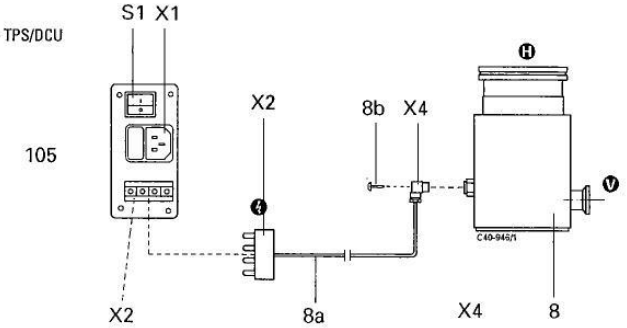

3.10. Fernbedienung anschließen

Fernbedienungsmöglichkeiten für verschiedene Funktionen sind über den Anschluß mit der Bezeichnung "REMOTE" am TC 600 über 10-poligen Schraub-Steckverbinder (Kabelquerschnitt 0,14-1,5 mm^2/Anschluß) möglich.
Es ist abgeschirmtes Kabel zu verwenden. Die Abschirmung ist mit der Kabelschelle auf der Steckerseite des TC 600 mit dem TC-Gehäuse zu verbinden.

Die Eingänge 2-6-werden aktiviert, indem man sie mit +24 V an Pin 1 (aktiv high) verbindet (siehe 3.12. Anschlußplan).

Pinbelegung und Funktion des Remote-Steckers
(Siehe nachfolgende Tabelle)

ACHTUNG

Beim Anlegen der Versorgungsspannung wird die Turbopumpe in Betrieb gesetzt.
Auslieferzustand:
Pin 1, Pin 2, Pin 3 und Pin 4 im Gegenstecker gebrückt.

Pinbelegung und Funktion des Remote-Steckers		
Pin Nr.	**Eingang offen (low)**	**Eingang geschlossen (high) an +24 V (Pin 1)**
1	+24 V	
2	Fluten gesperrt (siehe 3.5.)	Fluten freigegeben (siehe 3.5.)
3	Motor Turbopumpe aus	Motor Turbopumpe ein: Turbopumpe wird angetrieben, es fließt ein Strom durch die Motorspulen
4	Pumpstand aus	Pumpstand ein: Turbopumpe wird angetrieben, Vorpumpe wird über Relaisbox angesteuert
5	Heizung aus	Heizung ein: Nach Erreichen des Drehzahlschaltpunktes wird die Heizung eingeschaltet und nach Unterschreitung wieder abgeschaltet
5		Reset: Durch Anlegen eines Pulses (T< 2s) mit einer Amplitude von 24V kann eine Fehlerquittierung vorgenommem werden
6	Standby aus	Standby ein: Pumpe wird auf 66% der Nenndrehzahl beschleunigt
7	Drehzahlstellbetrieb aus	Drehzahl kann durch Anlegen eines PWM-Signals an diesem Pin oder über die Schnittstelle RS 485 geändert werden (siehe unter 4.6. Drehzahlstellbetrieb)
8	**Ausgang (low)** Drehzahlschaltpunkt nicht erreicht	**Ausgang (high)** Drehzahlschaltpunkt erreicht; Ausgang kann mit 24 V/50 mA belastet werden
9	**Ausgang (low)** Sammelfehlermeldung	**Ausgang (high)** störungsfreier Betrieb; Ausgang kann mit 24 V/50 mA belastet werden
10	Masse (Ground)	————

3.11. Serielle Schnittstelle RS 485 anschließen

Über den Anschluß mit der Bezeichnung "RS 485" am TC 600 ist mit einem 8-poligen Modular-Verbindungskabel der Anschluß eines externen Bedienteils (DCU 001/DCU 100) oder eines externen Rechners möglich.

Die Schnittstelle ist galvanisch von der maximal auftretenden Versorgungsspannung des TC 600 sicher getrennt.

Verbindung

Bezeichnung	Wert
Schnittstellenart:	RS 485
Baudrate:	9600 baud
Datenwortlänge:	8 bit
Parität:	keine (no parity)
Startbits:	1
Stopbits:	1..2

Die elektrischen Verbindungen sind im TC 600 optisch entkoppelt.

Pin	Belegung
1	nicht angeschlossen
2	+24V Ausgang (≤ 210 mA belastbar)
3	nicht angeschlossen
4	nicht angeschlossen
5	RS 485: D+ (DO / RI)
6	Gnd
7	RS 485: D- (DO / RI)
8	nicht angeschlossen

RS 485

1 ... 8

(Ansicht von Steckerseite TC 600)

Hinweis:
Der Anschluß einer RS 232 (z.B. PC) ist über einen Pegelumsetzer möglich (siehe Zubehör).

Anschluß der RS 485

Anschluß an ein festes Bussystem:

- ➡ Alle Geräte mit D+ (Pin 5 / RS 485) und D- (Pin 7 / RS 485) am Bus anschließen.
- ➡ Der Bus muß an beiden Enden abgeschlossen sein.

Die Verbindungen sind nach Spezifikation der Schnittstelle RS 485 aufzubauen.

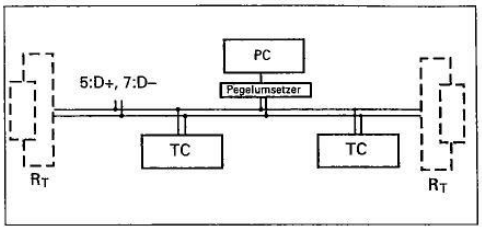

Alle am Bus angeschlossenen Geräte müssen unterschiedliche Schnittstellenadressen haben (Parameter 797).

Die Gruppenadresse der TC 600 lautet 960.

An die serielle Schnittstelle RS 485 dürfen nur Sicherheitskleinspannungen angeschlossen werden.

Alle eingeschalteten Remotefunktionen haben Priorität vor den Schnittstellenfunktionen.

Hinweis:
Detaillierte Angaben zur Bedienung über Schnittstelle RS 485 und deren elektrische Daten siehe separate Bedienungsanleitung PM 800 488 BN.

Zum Anschluß der Antriebselektronik TC 600 an einen Profibus-DP steht ein Prifibus-DP gateway TIC 250 zur Verfügung (Zubehör).
Einzelheiten zum Einsatz des TIC 250 sind der zugehörigen Betriebsanleitung PM 800 599 BN zu entnehmen.

3.12. Anschlußplan

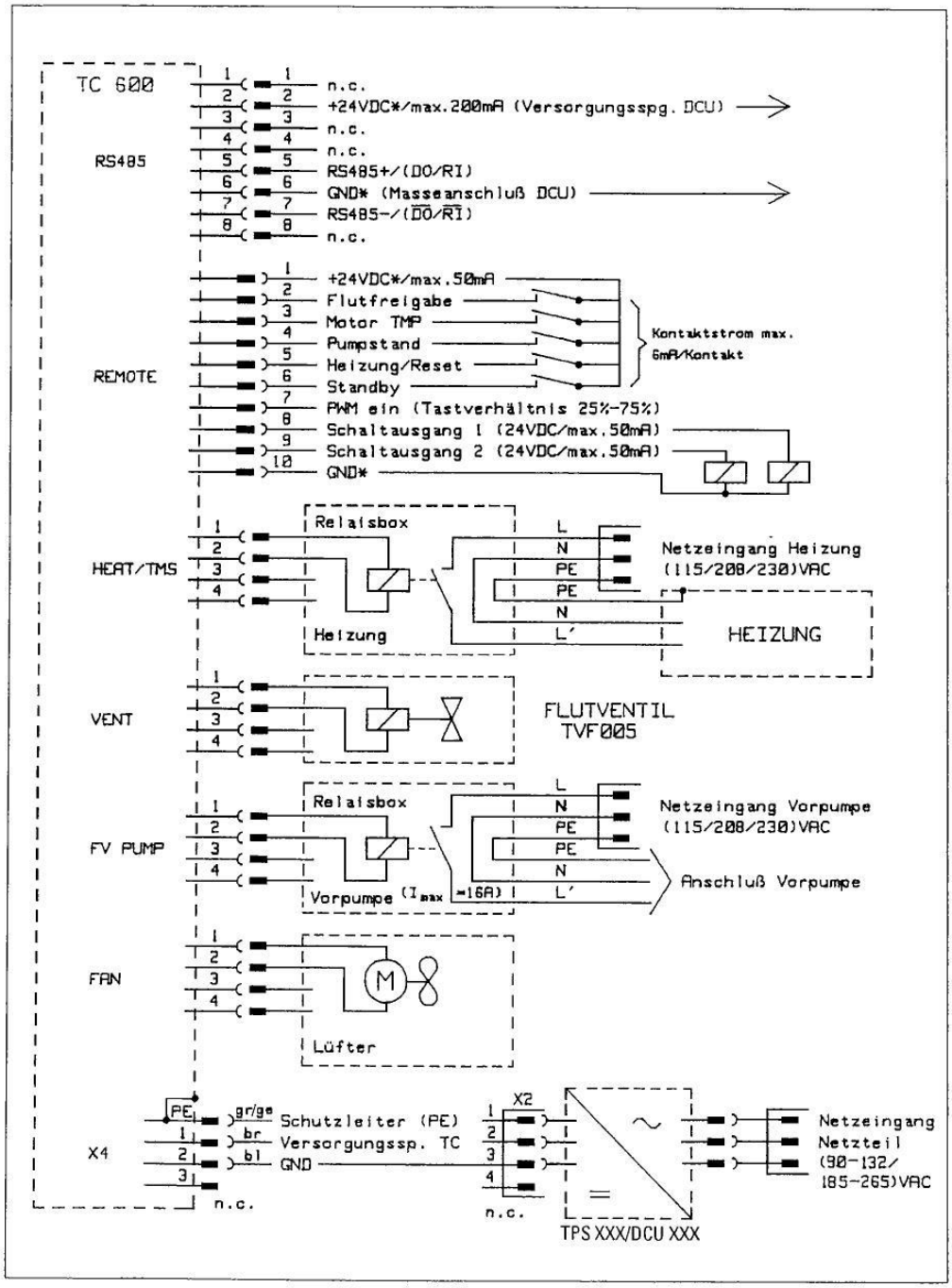

4. Betrieb

4.1. Vor dem Einschalten

Die Kapitel 4.1. bis 4.3. beziehen sich nur auf den Betrieb der Pumpe im Auslieferungszustand ohne Bedieneinheit DCU. Im Fernbedienungsstecker "Remote" sind die Brücken "Fluten freigegeben", "Motor TMP ein" und "Pumpstand ein" eingebaut.

Der Rotor der Turbopumpe dreht sich mit hoher Geschwindigkeit. Bei offenem Hochvakuumflansch Verletzungsgefahr und Gefahr der Zerstörung der Pumpe durch hineinfallende Gegenstände.
Pumpe daher niemals mit offenem Hochvakuumflansch in Betrieb nehmen.

➡ Bei Wasserkühlung: Kühlwasserzufluß öffnen und Durchfluß kontrollieren.
➡ Verbindungskabel 8a (Zubehör) in TC 600 einstecken und mit dem Netzteil TPS 100 an X2 verbinden (siehe 3.7.).

Hinweis:
Folgende Voreinstellungen sind fest programmiert:

– Anlaufzeit	8 min
– Drehzahlschaltpunkt	80%
– automatisches Fluten	50%

Diese Einstellungen können nur über die serielle Schnittstelle RS 485 (DCU oder PC) geändert werden (siehe zugehörige Betriebsanleitung).

Vorsicht beim Pumpen gefährlicher Gase! Alle Sicherheitsempfehlungen des Gasherstellers beachten!

4.2. Einschalten

➡ Turbopumpe mit Schalter S1 am Netzteil einschalten.
– Bei Luftkühlung wird auch der Kühlventilator durch die Antriebselektronik TC 600 eingeschaltet.
– Nach erfolgreich abgeschlossenem Selbsttest des TC 600 (Dauer ca. 10 Sekunden) wird die Turbopumpe und die Vorpumpe (falls angeschlossen) in Betrieb gesetzt.

Rückseite TPS 100

S1 Schalter EIN/AUS
X1 Netzanschluß
X2 Anschluß TC 600
F1 Sicherung
F2 Sicherung

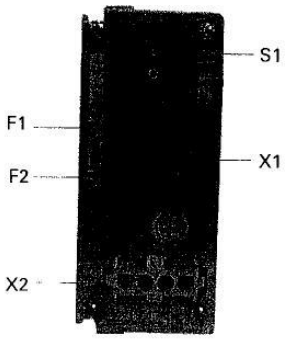

4.3. Ausschalten und Fluten

Um eine Verunreinigung der Turbopumpe nach dem Ausschalten zu vermeiden, muß die Pumpe vor dem Stillstand geflutet werden.
➡ Turbopumpe und Vorpumpe mit Schalter S1 am Netzteil gemeinsam ausschalten.
➡ Flutschraube (Lieferzustand) im Flutanschluß langsam ca. eine Umdrehung öffnen.

Flutzeit bis Atmosphärendruck minimal 30 Sekunden.

➡ Bei Wasserkühlung: Wasserzufuhr absperren.

4.4. Stillsetzen für längere Zeit

Werden teilweise aggressive oder gefährliche Gase gepumpt besteht Verletzungsgefahr durch Kontakt mit Prozeßgasen. Vor dem Ausbauen der Turbopumpe aus einer Anlage zuerst:

– Turbopumpe mit Neutralgas oder trockener Luft fluten;
– sicherstellen, daß sich keine Prozeßgase mehr in der Anlage oder in den Zuleitungen befinden.

Wenn die Turbopumpe für länger als ein Jahr stillgesetzt werden soll:
➡ Turbopumpe aus der Anlage ausbauen.
➡ Schmiermittelspeicher wechseln (siehe Abschnitt 7.1.).
Hinweis: Die Gebrauchsfähigkeit des Schmiermittels TL 011 beträgt ohne Betrieb **2 Jahre**!
➡ Hochvakuumflansch verschließen und Turbopumpe über Vorvakuumflansch evakuieren.
➡ Turbopumpe über Flutanschluß mit trockener Luft oder Stickstoff fluten.
➡ Vorvakuum- und Flutanschluß mit Blindflanschen verschließen.
➡ Pumpe senkrecht auf den Gummifüßen abstellen.
➡ In Räumen mit feuchter oder aggressiver Atmosphäre: Pumpe zusammen mit einem Beutel Trockenmittel, z. B. Silicagel, in einen Kunststoffbeutel luftdicht einschweißen.

Wichtig:
Wurde die Pumpe für einen Zeitraum von **3 Jahren** stillgesetzt muß ein Lagerwechsel vorgenommen werden (PFEIFFER-Service verständigen).

4.5. Betrieb mit DCU 001 / DCU 100

Bei Betrieb mit DCU 001 oder DCU 100 ist nach den zugehörigen Betriebsanleitungen PM 800 477 BN (DCU-Beschreibung) und PM 800 547 BN (Pumpenbetrieb mit DCU) zu verfahren.

4.6. Gasartabhängiger Betrieb

Werden die Pumpen mit Gaslast betrieben ist Wasserkühlung erforderlich.

Bei großer Gaslast und hoher Drehzahl wird der Rotor durch Reibung stark aufgeheizt. Zur Vermeidung von Überhitzung ist in der TC 600 eine Leistungs-Drehzahl-Kennlinie implementiert, wodurch die Pumpe bei jeder Drehzahl mit der maximal zulässigen Gaslast ohne die Gefahr einer Schädigung betrieben werden kann.
Die Maximalleistung ist gasartabhängig. Um das Leistungsvermögen der Pumpe bei jeder Gasart voll auszuschöpfen, stehen zwei Kennlinien zur Verfügung:

- "Gas-Mode 0" für Gase mit Molekülmasse ≥ 40 wie z. B. Argon;
- "Gas-Mode 1" für alle leichteren Gase.

➡ Zutreffenden Gas-Mode am TC 600 über das DCU einstellen (siehe Betriebsanleitung "Pumpenbetrieb mit DCU" PM 800 547 BN).

Das Pumpen von Gasen mit Molekülmasse ≥40 mit falschem Gas-Mode kann zur Zerstörung der Pumpe führen.

Eckpunkte der Leistungskennlinie siehe unter 8. Technische Daten.

Beim Hochlauf der Pumpe wird immer mit Maximalleistung gefahren, um die Hochlaufzeit zu minimieren. Bei Erreichen der Solldrehzahl wird automatisch auf die gewählte Leistungskennlinie umgeschaltet.
Bei Überschreitung der gasartabhängigen Maximalleistung wird die Drehzahl reduziert, bis ein Gleichgewicht zwischen zulässiger Leistung und Gasreibung erreicht wird. Um Drehzahlschwankungen zu vermeiden, ist es empfehlenswert, im Drehzahlstellbetrieb die Gleichgewichtsfrequenz oder eine etwas niedrigere Frequenz einzustellen.

Hinweis:
Es kann Pumpentypen geben, bei denen sich die beiden "Gas-Mode" Einstellungen nicht unterscheiden.

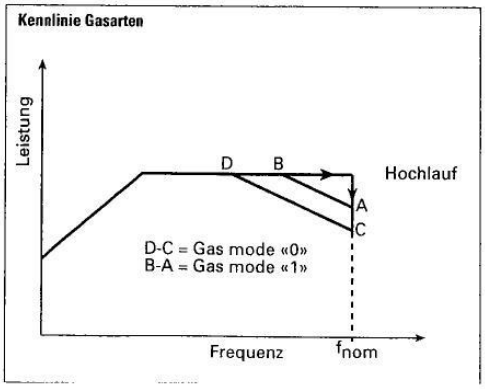

4.7. Betrieb über Fernbedienung

(siehe Tabelle unter 3.10.)
Fernbedienungsmöglichkeiten sind über den Anschluß mit der Bezeichnung „REMOTE" am TC 600 möglich.
Der Anschluß erfolgt über 10-poligen Schraub-Steckverbinder mit folgender Belegung:
1 – + 24 V
2 – Eingang Fluten Freigabe
3 – Eingang Motor Turbopumpe
4 – Eingang Pumpstand
5 – Eingang Heizung/Reset
6 – Eingang Standby
7 – Eingang PWM
8 – Schaltausgang 1: Drehzahlschaltpunkt
9 – Schaltausgang 2: Sammelstörungsmeldung
10 – Masse
Die Eingänge 2-6 werden aktiviert, wenn sie mit 24 V an Pin 1 verbunden werden (aktiv high).

Im Auslieferzustand des TC 600 befindet sich zwischen Pin 1, Pin 2, Pin 3 und Pin 4 im Gegenstecker eine Brücke.
Nach Anlegen der Betriebsspannung und erfolgreich abgeschlossenem Selbsttest des TC 600 wird die Turbopumpe und eine evtl. angeschlossene Vorpumpe in Betrieb gesetzt.

Fluten Freigabe (Option)

Automatisches Fluten:

Beim Abschalten der Turbopumpe oder des Pumpstandes wird nach Unterschreitung der Flutfrequenz von 50% der Enddrehzahl (750 Hz) das Flutventil für 0,3 Sekunden geöffnet, schließt dann wieder für 10 Sekunden und wird dann für die Flutzeit von 3600 Sekunden (1h) geöffnet.
Bei Netzausfall öffnet das Flutventil nach Unterschreitung der Flutfrequenz von 50% der Nenndrehzahl für 0,3 Sekunden.
Bei Netzwiederkehr wird der Flutvorgang abgebrochen.

Fluten gesperrt:
Es wird nicht geflutet.

Andere Flutmodi:
Andere Flutmodi können über DCU gewählt werden.

Motor Turbopumpe

Bei eingeschaltetem Pumpstand und erfolgreich abgeschlossenem Selbsttest (Dauer ca. 10 Sekunden) wird die Turbopumpe in Betrieb gesetzt.
Während des Betriebes kann die Turbopumpe bei weiterhin eingeschaltetem Pumpstand abgeschaltet und wieder eingeschaltet werden.

Pumpstand

Angeschlossene Pumpstandkomponenten werden angesteuert (z.B. Vorpumpe, Flutventil, Luftkühlung) und bei gleichzeitig betätigtem Eingang "Motor Turbopumpe" wird die Turbopumpe nach erfolgreich abgeschlossenem Selbsttest (Dauer ca. 10 Sekunden) in Betrieb gesetzt.

Heizung/Reset

Heizung (Option)

Nach Erreichen des Drehzahlschaltpunktes wird die Heizung ein- und nach Unterschreitung wieder abgeschaltet.

Reset

Der Eingang Heizung ist mit einer Doppelfunktion belegt (siehe unter 3.10., Punkt 5 "Reset").

Standby

Die Turbopumpe kann mit der Einrichtung "Standby" wahlweise mit 66% der Nenndrehzahl (Standby ein) oder mit der Nenndrehzahl (Standby aus) betrieben werden.

Drehzahlstellbetrieb über Eingang PWM

Anlegen eines pulsweitenmodulierten (PWM) Signals mit einer Grundfrequenz von 100 Hz ±20% mit einer Amplitude von max. 24 V und einem Tastverhältnis von 25-75% ermöglicht die Einstellung der Drehzahl im Bereich von 20-100% der Nenndrehzahl.

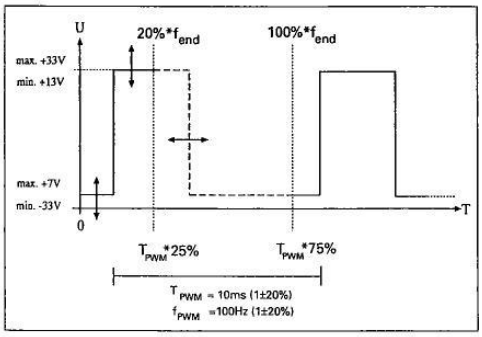

Liegt kein Signal an, läuft die Pumpe bis zur Enddrehzahl hoch.
Als Option wird eine PWM-Adapterbox für den Drehzahlstellbetrieb der Turbopumpe angeboten (siehe Zubehör).

Schaltausgänge

Die Schaltausgänge 1 und 2 können mit maximal 24 V / 50 mA pro Ausgang belastet werden. Folgende Funktionen sind den Schaltausgängen zugeordnet:

Schaltausgang 1: Aktiv high nach Erreichen des Drehzahlschaltpunktes. Der Schaltpunkt für die Turbopumpe ist auf 80% der Nenndrehzahl eingestellt. Er kann z.B. für eine Meldung "Pumpe betriebsbereit" benutzt werden.

Schaltausgang 2: Aktiv low bei Fehler - Sammelfehlermeldung

Der Anschluß eines Relais erfolgt zwischen Pin 10 (Masse) und dem jeweiligen Schaltausgang Pin 8 oder Pin 9 (siehe 3.12. Anschlußplan).

5. Überwachung des Betriebszustandes

5.1. Betriebsanzeige über LED

Über zwei in der Frontplatte des TC 600 eingebaute LED's ist es möglich auf bestimmte Betriebszustände der Turbopumpe und des TC 600 zu schließen.

Folgende Betriebszustände werden angezeigt:

LED		Ursache
leuchtet grün		– Netzteil in Ordnung – Funktion "Pumpstand ein" ausgeführt
blitzt grün		– Netzteil in Ordnung – Pumpstand aus
blinkt grün		– Netzausfall
	leuchtet rot	– Sammelfehler (z.B. Anlaufzeitfehler, Übertemperatur Turbomolekularpumpe oder TC 600) – Schaltausgang 2 aktiv (low)
	blinkt rot	– Warnung (z.B. Erdschluß der Versorgungsspannung, Netzausfall)

Hinweis:
Eine differenzierte Fehler- und Warnungsanzeige ist nur bei Betrieb mit DCU möglich.

5.2. Temperaturüberwachung der Turbopumpe

Bei unzulässiger Motortemperatur oder unzulässig hoher Gehäusetemperatur wird der Motorstrom reduziert.
Dies kann zum Unterschreiten des eingestellten Drehzahlschaltpunktes und damit zum Abschalten der Turbomolekularpumpe führen.
LED an TC 600 leuchtet rot: Sammelfehler.

6. Was tun bei Störungen?

Problem	Mögliche Ursachen	Behebung
Pumpe läuft nicht an; Keine der eingebauten LED's am TC 600 leuchtet	• Stromversorgung unterbrochen • Falsche Betriebsspannung angelegt • Pin 1-3 und 1-4 am Remote-Stecker nicht verbunden • Keine Betriebsspannung angelegt • TC 600 defekt • Spannungsabfall im Kabel	• Sicherung im Netzteil überprüfen • Steckkontakt am Netzteil überprüfen • Zuleitung des Netzteils prüfen • Spannung am Netzteil (24 V DC) am Anschluß X2 kontrollieren • Richtige Betriebsspannung anlegen • Pin 1-3 und 1-4 am Remote-Stecker verbinden • Steckkontakte am Netzteil überprüfen • Zur Reparatur PFEIFFER-Service verständigen • Geeignetes Kabel verwenden
Pumpe erreicht nicht die Nenndrehzahl innerhalb der eingestellten Anlaufzeit; Pumpe schaltet während des Betriebs ab	• Vorvakuumdruck zu hoch • Leck oder hohe Gaslast • Rotor schwergängig durch defektes Lager • Anlaufzeit im TC 600 zu kurz eingestellt • Thermische Überlastung durch: – zu wenig Wasserdurchfluß – zu geringe Luftzufuhr – zu hohen Vorvakuumdruck – zu hohe Umgebungstemperatur	• Funktion der Vorpumpe überprüfen • Dichtungen überprüfen • Leck suchen und beseitigen • Prozeßgaszufuhr senken • Lager prüfen (Geräusche?): PFEIFFER-Service verständigen • Anlaufzeit mit DCU oder PC länger einstellen • freien Durchfluß herstellen • ausreichende Luftzufuhr gewährleisten • Vorvakuumdruck senken • Umgebungstemperatur senken
Pumpe erreicht nicht den Enddruck	• Pumpe verschmutzt • Undichtigkeit am Rezipient, Leitungen oder Pumpe	• Pumpe ausheizen • Bei stärkerer Verschmutzung: zur Reinigung PFEIFFER-Service verständigen • Lecksuche, ausgehend vom Rezipienten • Undichtigkeit beseitigen
Ungewöhnliche Betriebsgeräusche	• Lagerschaden • Beschädigung des Rotors • Splitterschutz sitzt nicht fest (falls vorhanden)	• Zur Reparatur PFEIFFER-Service verständigen • Zur Reparatur PFEIFFER-Service verständigen • Sitz des Splitterschutzes überprüfen (siehe Abschnitt 3.2.)
Rote LED am TC 600 leuchtet	• Sammelfehler	• Reset über Netz aus/ein oder Remote Pin 5 • Differenzierte Fehleranzeige mit DCU möglich
Rote LED am TC 600 blinkt	• Warnung durch: – Netzausfall – Erdschluß der Versorgungsspannung	• Differenzierte Warnungsanzeige mit DCU möglich • Netzteilspannung überprüfen • Netzanschluß des Netzteils überprüfen • Netzteilspannung auf Erdschluß prüfen

7. Wartung

Wichtig!
Für Schäden und Betriebsstörungen, die aufgrund unsachgemäß ausgeführter Wartung entstehen, übernehmen wir keine Haftung für Personen- oder Materialschäden und der Haftungs- und Gewährleistungsanspruch erlischt.

- Den Schmiermittelspeicher können Sie selbst austauschen (siehe 7.1.).
- Die Reinigung Ihrer Pumpe ist bei leichter Verschmutzung vor Ort möglich. Die Vorgehensweise klären Sie bitte mit Ihrer PFEIFFER-Servicestelle ab.

Für alle anderen Wartungs- oder Instandsetzungsarbeiten wenden Sie sich bitte ebenfalls an Ihre zuständige PFEIFFER-Servicestelle.

Keine mechanische Belastung auf die Antriebselektronik TC 600 ausüben.

7.1. Schmiermittelspeicher ersetzen

Schmiermittelspeicher mindestens einmal jährlich austauschen.
Bei extremen Belastungen oder unreinen Prozessen: Wechselintervall mit PFEIFFER-Service abklären.

➡ Turbopumpe ausschalten, auf Atmosphärendruck fluten (siehe Abschnitt 4.3.) und gegebenenfalls abkühlen lassen.
➡ Turbopumpe, wenn erforderlich, aus der Anlage ausbauen.
➡ Gummifüße 6 an der Unterseite der Pumpe abschrauben.
➡ Verschlußdeckel 90 an der Unterseite der Pumpe mit geeignetem Werkzeug A (Bestell-Nummer PV M040 550 oder verstellbarer Zweilochmutterndreher) herausschrauben; auf O-Ring 91 achten.
➡ Schmiermittelspeicher 92 mit Hilfe von zwei Schraubendrehern heraushebeln.

Schmiermittelspeicher kann giftige Substanzen aus den gepumpten Medien enthalten.
Schmiermittelspeicher nach den geltenden Vorschriften entsorgen!
Sicherheitsdatenblatt auf Anfrage.

Schmiermittelspeicher ersetzen

6 Gummifuß (4x)
90 Verschlußdeckel
91 O-Ring
92 Schmiermittelspeicher
93 O-Ring
A Werkzeug

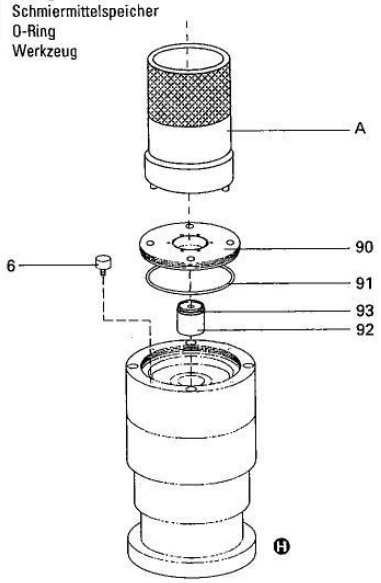

➡ Verunreinigungen an Pumpe und Verschlußdeckel mit einem sauberen, fusselfreien Tuch entfernen.
➡ Neuen Schmiermittelspeicher 92 bis zum O-Ring 93 in die Pumpe einschieben.
Der Schmiermittelspeicher ist mit Schmiermittel TL 011 fertig befüllt.
➡ Verschlußdeckel 90 mit O-Ring 91 anschrauben.
Mit dem Verschlußdeckel wird der Schmiermittelspeicher in die richtige axiale Position gebracht.
➡ Gummifüße wieder einschrauben.

8. Service

Nehmen Sie bitte unseren Service in Anspruch!
Sollte wider Erwarten ein Schaden an Ihrer Pumpe auftreten, haben Sie verschiedene Möglichkeiten, Ihre Anlagen-Verfügbarkeit aufrecht zu erhalten:
- Pumpe vor Ort durch den PFEIFFER-Service reparieren lassen;
- Pumpe zur Reparatur ins Stammwerk einsenden;
- Pumpe ersetzen.

Genauere Informationen erhalten Sie von Ihrer PFEIFFER-Vetretung.

Bitte beachten Sie, daß bei Ersatzlieferung durch den PFEIFFER-Service immer die Standard-Betriebsparameter voreingestellt sind. Sollten bei Ihrer Anwendung veränderte Parameter verwendet werden, so sind diese neu einzustellen.

Hinweis:
Turbopumpe und Antriebselektronik TC 600 bilden eine Einheit und sind immer komplett zur Reparatur einzusenden.
Vor dem Einsenden des Gerätes ist sicherzustellen, daß der Fehler nicht vom Netzteil ausgeht (Netzteil überprüfen).

Vor dem Einsenden:
➡ Deutlich sichtbar Vermerk anbringen: "Frei von Schadstoffen" (auf eingesandten Geräten und zusätzlich auf Lieferschein und Anschreiben).

"Schadstoffe" sind Stoffe und Zubereitungen entsprechend der Gefahrstoff-Verordnung in der derzeit gültigen Fassung. Fehlt der Vermerk, führt PFEIFFER kostenpflichtig eine Dekontamination durch. Dies gilt auch, wenn der Betreiber keine Möglichkeit zur ordnungsgemäßen Dekontamination hat. Mikrobiologisch, explosiv oder radioaktiv kontaminierte Geräte werden grundsätzlich nicht angenommen.

Erklärung zur Kontamination ausfüllen
➡ In jedem Fall eine Kopie der "Erklärung zur Kontaminierung" sorgfältig und wahrheitsgemäß ausfüllen.
➡ Vollständig ausgefüllte Kopie dem Gerät beifügen; zusätzliches Exemplar direkt an den zuständigen PFEIFFER-Service schicken.

Bei allen Fragen oder Unklarheiten bezüglich Kontaminierung wenden Sie sich bitte an die nächste PFEIFFER-Vertretung.

Kontaminierte Geräte vor der Einsendung oder vor einer eventuellen Entsorgung dekontaminieren! Mikrobiologisch, explosiv oder radioaktiv kontaminierte Pumpen nicht versenden!

Kontaminierte Geräte versenden
Müssen kontaminierte Geräte zur Wartung/Reparatur eingesandt werden, bitte folgende Versandvorschriften einhalten:
➡ Pumpe neutralisieren durch Spülen mit Stickstoff oder trockener Luft.
➡ Alle Öffnungen luftdicht verschließen.
➡ Pumpe oder Gerät in geeignete Schutzfolie einschweißen.
➡ Gerät nur in geeigneten, stabilen Transportcontainern einschicken.

Hinweis:
Reparaturaufträge werden nur entsprechend unseren allgemeinen Lieferbedingungen durchgeführt. Ist eine Reparatur notwendig, senden Sie bitte die Pumpe an Ihre nächste PFEIFFER-Servicestelle.

Kontaktadressen und Service-Hotline
Kontaktadressen und Ihre Service-Hotline finden Sie auf der Rückseite dieser Anleitung.

9. Technische Daten

Größe	Einheit	TMH 071 P	TMH 071 P	TMU 071 P
Anschlußnennweiten:				
Eingang		DN40 ISO-KF	DN 63 ISO-K	DN 63 CF-F
Ausgang		DN 16 ISO-KF/G 1/4"	DN 16 ISO-KF/G 1/4"	DN 16 ISO-KF/G 1/4"
Flutanschluß		G 1/8"	G 1/8"	G 1/8"
Nenndrehzahl	1/min	90 000	90 000	90 000
Standby-Drehzahl	1/min	60 000	60 000	60 000
Hochlaufzeit	min	2	2	2
Schalldruckpegel	dB (A)	< 45	< 45	< 45
Enddruck Vorpumpe	mbar	< 10	< 10	< 10
Max. zulässige Rotortemperatur	°C	80	80	80
Zulässige eingestrahlte Wärmeleistung	W	4	4	4
Saugvermögen für:				
Stickstoff N_2	l/s	33	60	60
Helium He	l/s	38	55	55
Wasserstoff H_2	l/s	39	45	45
Kompressionsverhältnis für:				
N_2		$> 10^{11}$	$> 10^{11}$	$> 10^{11}$
He		$1 \cdot 10^7$	$1 \cdot 10^7$	$1 \cdot 10^7$
H_2		$> 10^5$	$> 10^5$	$> 10^5$
Max. Vorvakuumdruck für:				
N_2	mbar	18	18	18
He	mbar	17	17	17
H_2	mbar	8	8	8
Max. Gasdurchsatz 1)				
bei Wasserkühlung N_2	mbarl/s	1,1	1,1	1,1
He	mbarl/s	2,5	2,5	2,5
bei Luftkühlung 2) N_2	mbarl/s	0,45	0,45	0,45
Max. Gasdurchsatz bei 0,1 mbar 3)				
N_2	mbarl/s	2,2	2,2	2,2
He	mbarl/s	2,6	2,6	2,6
H_2	mbarl/s	2	2	2
Eckpunkte Leistungskennlinien 4)				
A	W / Hz	80 / 1500	80 / 1500	80 / 1500
B	W / Hz	80 / 1500	80 / 1500	80 / 1500
C	W / Hz	55 / 1500	55 / 1500	55 / 1500
D	W / Hz	80 / 1300	80 / 1300	80 / 1300
Enddruck 5)				
mit Drehschiebervakuumpumpe	mbar	$< 5 \cdot 10^{-10}$	$< 5 \cdot 10^{-10}$	$< 5 \cdot 10^{-10}$
mit Membranpumpe	mbar	$< 1 \cdot 10^{-8}$ 6)	$< 1 \cdot 10^{-8}$ 6)	$< 1 \cdot 10^{-8}$ 6)
Schmiermittel		TL 011	TL 011	TL 011
Max. Kühlwasserbedarf bei Wassertemperatur 15 °C 7)	l/h	100	100	100
Kühlwassertemperatur	°C	5 - 25	5 - 25	5 - 25
Zulässige Umgebungstemperatur bei Luftkühlung	°C	0 - 35	0 - 35	0 - 35
Leistungsaufnahme der Heizung	W	32	32	32
Gewicht	kg	2,8	2,8	3,5
Zulässiges Magnetfeld	mT	4	4	4
Betriebsspannung	VDC	24 ± 5%	24 ± 5%	24 ± 5%
Dauer- 7) / max. Stromaufnahme	A	4,1 / 4,6	4,1 / 4,6	4,1 / 4,6
Dauer- 7) / max. Leistung	W	100 / 110	100 / 110	100 / 110
Schutzart		IP 30	IP 30	IP 30
Relative Luftfeuchte	%	5 - 85 nicht betauend	5 - 85 nicht betauend	5 - 85 nicht betauend

1) Bis Frequenzabfall; höhere Durchsätze bei verringerter Drehzahl
2) Bis 30 °C Umgebungstemperatur
3) Drehzahl kann unter die Nenndrehzahl abfallen.
4) Kennlinie Gasarten siehe unter Kapitel 4.6
6) Enddruck nur mit metallischer Dichtung des HV-Flansches erreichbar (Enddruck mit Viton-Dichtung $< 1 \cdot 10^{-8}$ mbar)
7) Bei maximalem Gasdurchsatz

9.1. Maßbild

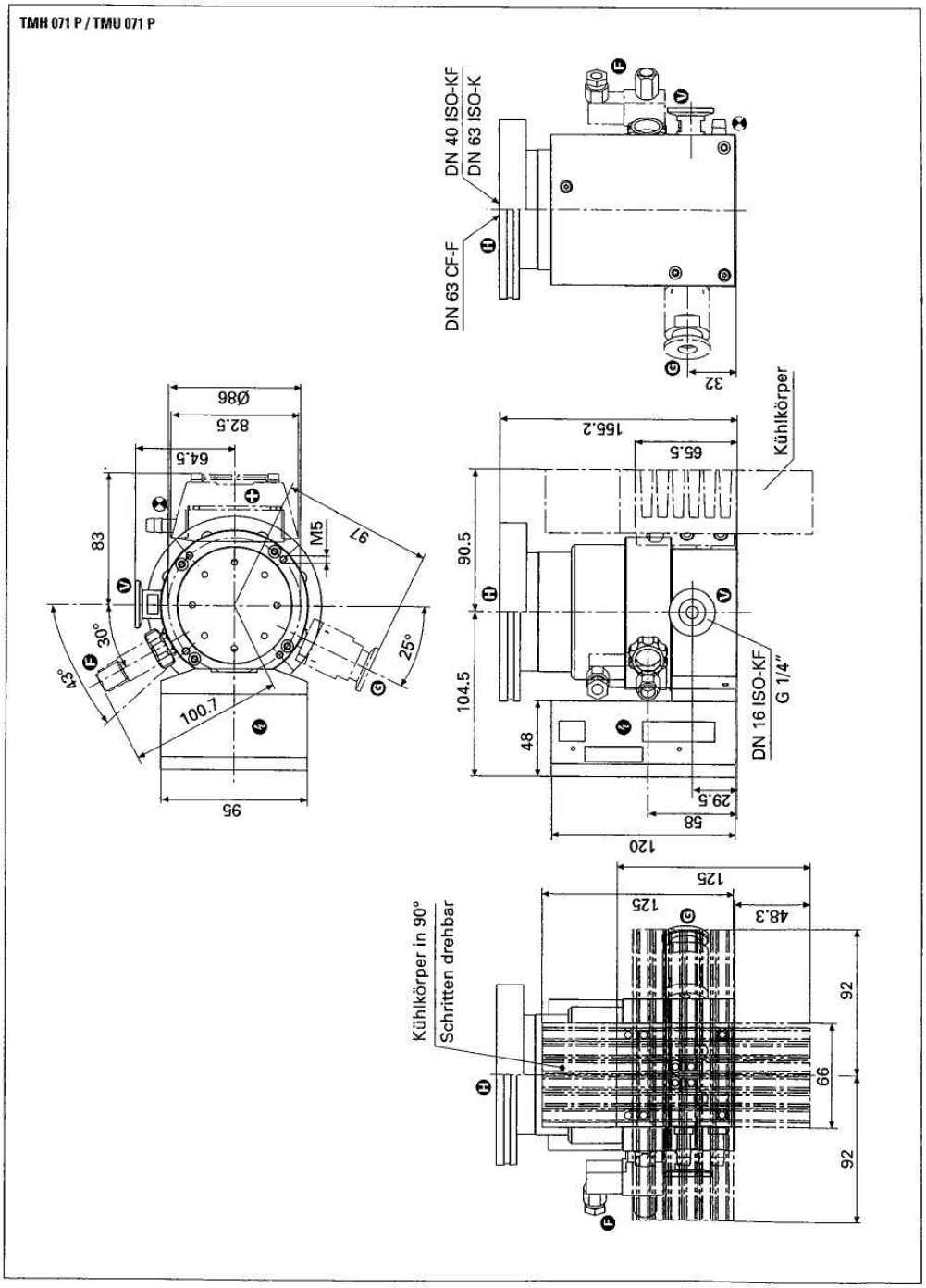
TMH 071 P / TMU 071 P
DN 40 ISO-KF
DN 63 ISO-K
DN 63 CF-F
32
Ø86
82.5
64.5
83
M5
97
30°
43°
25°
100.7
95
155.2
65.5
Kühlkörper
90.5
104.5
48
DN 16 ISO-KF
G 1/4"
29.5
58
120
125
125
48.3
Kühlkörper in 90°
Schritten drehbar
92
66
92

10. Ersatzteile

Pos.	Benennung	Stück	Größe	Nummer	Bemerkung	Bestellmenge
	Ersatzteile TMH 071 P/TMU 071 P					
	Dichtungssatz	1		PM 087 077 -T		
6	Gummifuß	4		P 3695 700 ZD		
17	USIT-Ring	1		P 3529 133 -A		
90	Verschlußdeckel	1		PM 083 021 -X		
91	O-Ring	1	68 x 3	P 4070 972 PP		
92	Schmiermittelspeicher	1		PM 073 073 -T		

Ersatzteile

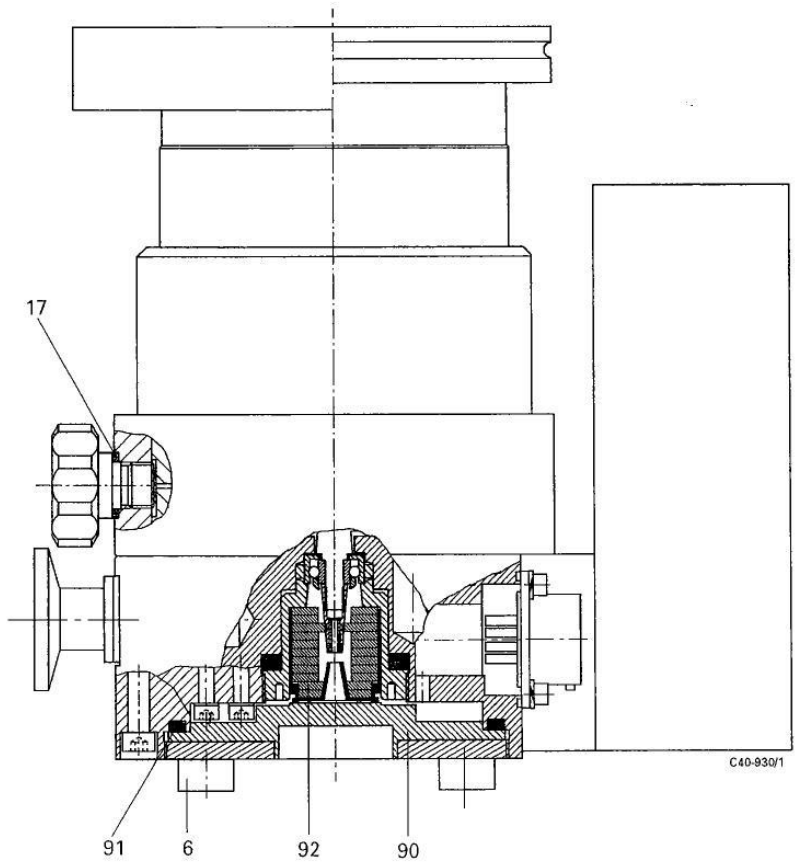

11. Zubehör

Benennung	Größe	Nummer	Bemerkung/ zugehörige Betriebsanleitung	Bestellmenge
Bauteile zum Kühlen				
Schmutzfänger	R 3/8"	P 4161 300 2R		
Wasserrückkühler TZK 400	230 V, 50 Hz	PM Z01 245	PM 800 369 BN	
Luftkühlung	24 V DC	PM Z01 253	PM 800 543 BN	
Wasserkühlung		PM 016 000 -T	PM 800 546 BN	
Kühlkörper für Konvektionskühlung		PM 093 237 -T		
Bauteile zum Fluten				
Flutventil TVF 005, stromlos geschlossen	24 V DC	PM Z01 135	PM 800 507 BN	
Trockenvorlage TTV 001 (mit Zeolith gefüllt)		PM Z00 121	PM 800 022 BN	
Flutflansch	DN 10 ISO-KF	PM 033 737 -T		
Bauteile zum Heizen				
Gehäuseheizung			Wasserkühlung erforderlich/	
	230 V, Schukostecker	PM 041 900 -T	PM 800 542 BN	
	208 V, UL-Stecker	PM 041 901 -T	PM 800 542 BN	
	115 V, UL-Stecker	PM 041 902 -T	PM 800 542 BN	
Weiteres Zubehör				
Verbindungskabel TC 600 - TPS/DCU	3 m	PM 051 103 -T	andere Längen auf Anfrage	
Netzteil				
– TPS 100; Wand- oder Normschienenmontag		PM 041 827 -T	PM 800 521 BN	
– TPS 100; 19"-Einschubgerät		PM 041 828 -T	PM 800 521 BN	
– DCU 100; 19"-Einschubgerät mit Bedien- und Anzeigeeinheit DCU		PM C01 694	PM 800 477 BN	
Netzkabel				
Schukostecker	230 V	P 4564 309 ZA		
UL-Stecker	208 V	P 4564 309 ZF		
UL-Stecker	115 V	P 4564 309 ZE		
Bedien- und Anzeigeeinheit DCU 001		PM 041 816 -T	PM 800 477 BN	
Relaisbox Vorpumpe				
Schukostecker	230 V	PM 041 920 -T	PM 800 544 BN	
UL-Stecker	208 V	PM 041 921 -T	PM 800 544 BN	
UL-Stecker	115 V	PM 041 922 -T	PM 800 544 BN	
PWM-Adapterbox		PM 051 028 -U	PM 800 563 BN	
Pegelumsetzer RS 232/485		PM 051 054 -X	PM 800 549 BN	
Abdeckung TC 600 (IP 54)		PM 051 327 -T	PT 800 024 BN	
Profibus-DP gateway TIC 250		PM 051 257 -T	PM 800 599 BN	
Dämpfungskörper, TMH	DN 63 ISO-K	PM 006 800 -X		
TMH	DN 40 ISO-KF	PM 006 799 -X		
TMU	DN 63 CF-F	PM 006 801 -X		
Splitterschutz	DN 40 ISO-KF	PM 006 375 -X		
	DN 63 ISO-K	PM 006 376 -X		
Schutzgitter	DN 63 ISO-K	PM 006 597 -R		
Dichtring, TMH	DN 63 ISO-K	PF 303 106 -T		
CU-Dichtung (10 St.), TMU	DN 63 CF	PF 501 406 -T		
Schraubensatz, TMU	DN 63 CF	PF 505 002 -T		
Sperrgasventil		PM Z01 142	PM 800 229 BN	
Schlauchnippel für Sperrgasventil	DN 16 ISO-KF-10	PF 144 020		

Bei Zubehör-/Ersatzteilbestellung bitte unbedingt vollständige Teile-Nummer angeben. Bei Ersatzteilbestellungen bitte zusätzlich Gerätetyp und Gerätenummer angeben (siehe Typenschild). Nutzen Sie diese Listen als Bestellvorlage (Kopie).

Erklärung zur Kontaminierung von Vakuumgeräten und -komponenten

Die Reparatur und/oder die Wartung von Vakuumgeräten und -komponenten wird nur durchgeführt, wenn eine korrekt und vollständig ausgefüllte Erklärung vorliegt. Ist das nicht der Fall, kommt es zu Verzögerungen der Arbeiten.

Wenn die Reparatur/Wartung im Herstellerwerk und nicht am Ort ihres Einsatzes erfolgen soll, wird die Sendung bei nicht vorliegender Erklärung gegebenenfalls zurückgewiesen.

Diese Erklärung darf nur von autorisiertem Fachpersonal ausgefüllt und unterschrieben werden:

1. Art der Vakuumgeräte und -komponenten

- Typenbezeichnung: _____
- Artikelnummer: _____
- Seriennummer: _____
- Rechnungsnummer: _____
- Lieferdatum: _____

2. Grund für die Einsendung

_____
_____
_____
_____
_____

3. Zustand der Vakuumgeräte und -komponenten

- Waren die Vakuumgeräte und -komponenten in Betrieb? ja ❐ nein ❐
- Welches Betriebsmittel wurde verwendet?

  _____
- Sind die Vakuumgeräte und -komponenten frei von gesundheitsgefährdenden Schadstoffen?
  ja ❐ (weiter siehe Absatz 5)
  nein ❐ (weiter siehe Absatz 4)

4. Einsatzbedingte Kontaminierung der Vakuumgeräte und -komponenten

- toxisch	ja ❐	nein ❐
- ätzend	ja ❐	nein ❐
- mikrobiologisch*)	ja ❐	nein ❐
- explosiv*)	ja ❐	nein ❐
- radioaktiv*)	ja ❐	nein ❐
- sonstige Schadstoffe	ja ❐	nein ❐

*) Mikrobiologisch, explosiv oder radioaktiv kontaminierte Vakuumgeräte und -komponenten werden nur bei Nachweis einer vorschriftsmäßigen Reinigung entgegengenommen!

Art der Schadstoffe oder prozeßbedingter, gefährlicher Reaktionsprodukte, mit denen die Vakuumgeräte und -komponenten in Kontakt kamen:

Handelsname Produktname Hersteller	Chemische Bezeichnung (evtl. auch Formel)	Gefahrklasse	Maßnahmen bei Freiwerden der Schadstoffe	Erste Hilfe bei Unfällen
1.				
2.				
3.				
4.				
5.				

5. Rechtsverbindliche Erklärung

Hiermit versichere(n) ich/wir, daß die Angaben in diesem Vordruck korrekt und vollständig sind. Der Versand der kontaminierten Vakuumgeräte und -komponenten erfolgt gemäß den gesetzlichen Bestimmungen.

Firma/Institut: _____

Straße: _____ PLZ, Ort: _____

Telefon: _____

Fax: _____ Telex: _____

Name: _____
(in Druckbuchstaben)

Position: _____

Datum: _____ Firmenstempel: _____

Rechtsverbindliche Unterschrift:

Index

Please note: Current operating instructions are available via www.pfeiffer-vacuum.de under "Infoservice".

1. Safety Instructions

- ☞ Read and follow all instructions in this manual.
- ☞ Inform yourself regarding:
  - Hazards which can be caused by the pump;
  - Hazards which can be caused by your system.
  - Hazards which can be caused by the media being pumped.
- ☞ Avoid exposing any part of the body to vacuum.
- ☞ Observe the safety and accident prevention regulations.
- ☞ Regularly check that all accident prevention measures are being complied with.
- ☞ Do not operate the turbopump with open high vacuum flange.
- ☞ Do not carry out any unauthorised conversions or alterations to the turbopump with TC 600.
- ☞ When returning the turbopump observe the shipping instructions.
- ☞ Use at least 4 bracket screws to connect the high vacuum flange (ISO-flange).
- ☞ The turbopump must be anchored in accordance with the installation instructions.
- ☞ Do not disconnect the plug between the TC 600 and accessory components during operations.
- ☞ When the turbopump is open disconnect the voltage supply to the TC 600.
- ☞ When working on the turbopump, the high vacuum flange should only be opened once the rotor is at rest.
- ☞ When using sealing gas, the pressure in the hose connection should be limited to 2 bar via the overpressure valve.
- ☞ If a heater is in use temperatures of up to 120 °C can be present in the area of the high vacuum flange. Take care to avoid burns !
- ☞ During operations, temperatures of up to 65 °C can arise in the lower part of the turbopump. Take care to avoid burns!
- ☞ Keep leads and cables well away from hot surfaces (> 70 °C).
- ☞ Operate the turbopump with TC 600 only in conjunction with the relevant power unit (accessory).
- ☞ The unit has been accredited protection class IP 30. When the unit is operated in environments which require other protection classes, the necessary measures must be taken. Protection class IP 54 is afforded by retro-fitting a cover plate (Accessory) to the TC 600.
- ☞ The mains connection must be subject to a safe connection to the PE (protection class 1).
- ☞ If the turbopump and the TC 600 are operated independently of each other (only permissible with the agreement of the manufacturer) the turbopump must be connected to the PE.
- ☞ The cause of any operating voltage leakage to earth (red LED flashes) must be eliminated to avoid the danger of an electric shock.

Modifications reserved.

1.1. For Your Orientation

On page 43 of this operating manual you will find a drawing showing the connection options for the power unit and accessories.

Instruction in the text

➡ Working instruction: here, you have to do something.

Symbols used

The following symbols are used throughout in all illustrations.

- Ⓗ High vacuum flange
- Ⓥ Fore-vacuum flange
- Ⓔ Venting connection
- Ⓦ Cooling water connection
- Ⓐ Air cooling
- Ⓔ Electric connection
- Ⓖ Sealing gas connection

Abbreviations used

DCU = Operating and display control unit
TC = Electronic drive unit, turbopump
TPS = Power uUit

Position numbers

The same pump and accessory parts have the same position numbers in all illustrations.

1.2. Pictogram Definitions

Danger of burns from touching hot parts.

Danger of an electric shock.

Danger of personal injury.

Danger of damage to the pump or to the system.

Danger of injury from rotating parts.

2. Understanding The Pumps TMH 071 P/TMU 071 P

2.1. Main Features

Turbopumps TMH 071 P/TMU 071 P with the TC 600 form a complete unit. Voltage is supplied by the power unit (see "Accessories").

Turbomolecular Drag Pump TMH 071 P/TMU 071 P

1 High vacuum flange
2 Fore-vacuum flange
4 Venting Valve
6 Rubber feet
8 Electronic Drive Unit TC 600

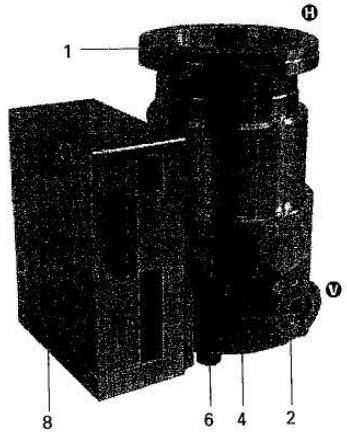

Cooling
- Enhanced convection cooling with cooling unit (accessory),
- air cooling (accessory) or
- water cooling (accessory).

Integrated protective measures against excess temperatures: The Electronic Drive Unit TC 600 reduces the rotor rotation speed.

Bearings
High vacuum side: Wear free permanent magnetic bearing.
Fore-vacuum side: Oil circulatory lubricated ball bearing with ceramic balls.

Proper use
- The Turbomolecular Pumps TMH 071 P/TMU 071 P may only be used for the purpose of generating vacuum.
- The turbopumps may only be used to pump those media against which they are chemically resistant. For other media the operator is required to qualify the pumps for the processes involved.
- If the process produces dust, the maintenance intervals must be specified accordingly and sealing gas must be used.
- The turbopump must be connected to a backing pump in accordance with Section 3.3.
- Only PFEIFFER power units may be used to operate the TC 600. These power units guarantee voltage which is safely separated from the mains accordance with Standard EN 60 742. The use of other power units requires the express agreement of the manufacturer.
- The pumps may only be operated providing the ambient conditions in compliance with Protection Type IP 30 are observed.

Improper use
The following is regarded, inter alia, as improper:
- The pumping of explosive or corrosive gases.
- Operating the pumps in areas where there is a danger of explosion.
- The pumping of gases and vapours which attack the materials of the pumps.
- The pumping of corrosive gases without sealing gas.
- The pumping of condensating vapours.
  Operations involving impermissibly high levels of gas loads.
- Operations with improper gas modes.
- Operations involving too high levels of heat radiation power (see Section 9. "Technical Data").
- Operations without the use of cooling equipment.
- Operating the pump in environments which require a protection class superior to IP 30.
- The use of other power units or accessories which are not named in this manual or which have not been agreed by the manufacturer.
- The connection to power units with earthing of a direct voltage pole.

Improper use will cause all claims for liability and guarantees to be forfeited.

2.2. Differences Between The Pump Types

Feature	TMH 071 P	TMU 071 P
High vacuum flange	ISO-KF / ISO-K	CF-F
High vacuum seal	Viton	Metal
Attainable final pressure	$< 1 \cdot 10^{-8}$ mbar (without baking-out)	$< 5 \cdot 10^{-10}$ mbar (with baking-out)

Abbreviations on the type of the pump
Suffix **"P"**: Purge gas connection for the prevention of the ingress of aggressive gases into the motor and bearing arena.

3. Installation

3.1. Preparations For Installation

BEWARE

Do not carry out any unauthorised conversions or alterations to the turbopump.

- The maximum permissible rotor temperature of the pump is 90 °C. If the vacuum chamber or parts in the vacuum chamber are heated must be fitted if necessary, suitable shielding in the vacuum chamber before the turbopump (constructional suggestions available on request).
- Only remove the blank flange from the high and fore-vacuum side immediately before connection.
- On Turbopumps TMH 071 P/TMU 071 P the lubricant reservoir is already fitted and filled.
- Where magnetic fields of > 4 mT are involved suitable shielding must be provided (available on request).
- If the pump is baked out, the heating sleeve and the body of the pump must be insulated to prevent burns from accidental contact.
- In the event of a sudden standstill of the rotor, torques of up to 330 Nm can arise and these must be taken up by the turbopump and frame. Pumps must be anchored as follows:
  - ISO flange with 4 bracket screws, or
  - CF flange with the complete set of M8 screws, or
  - Underside of the pump with 4 screws M5, screws quality 8.8.
- Either air or water cooling is necessary for operating the pump. Where operations with convection cooling are involved, a cooling unit must be used (please see "Accessories")

3.2. Installing The Pump, Connecting The High Vacuum Side

Important

The utmost cleanliness must be observed when fitting all high vacuum parts. Unclean components prolong the pumping time.

Using the splinter shield

The use of a splinter shield in the high vacuum flange protects the turbopump against foreign bodies coming from the vacuum chamber but does reduce the volume flow rate of the pump by approximately 15%.
For fitting splinter shields please refer to "Fitting the splinter shield"
The high vacuum side can be flanged directly to the vacuum chamber or via a bellows or a vibration compensator.

Connecting Via A Bellows

If the high vacuum side is to be flanged via a bellows, the turbopump must be secured for example via the holes on the underside of the turbopump must be secured for example via the holes on the underside of the pump. The fastening must be able to withstand the torque referred to in Section 3.1.

Connecting Via A Vibration Compensator

CAUTION

The maximum permissible temperature at the vibration compensator is 100 °C.

Where a vibration compensator is in use, a freely suspended turbopump can be flanged onto the vacuum chamber. Additional fastening is unnecessary.

Directly Flanging The Pump

Permissible installation positions for the turbopump

11 Vacuum chamber

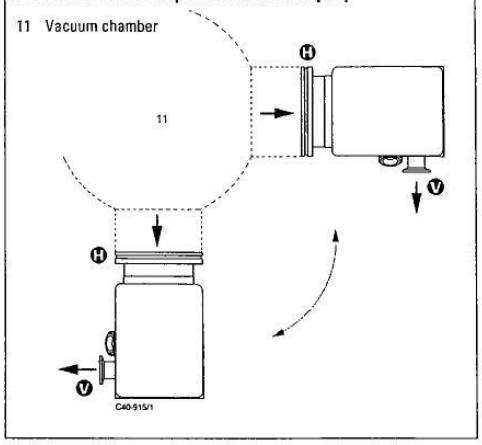

The maximum loading capacity of the high vacuum flange is 200 N (equivalent to 20 kg).
Assymetric loading on the high vacuum flange must be avoided.

With horizontal pump installation and oil-sealed backing pumps (e.g. rotary vane pumps) the fore-vacuum flange of the turbopump must be aligned vertically downwards (maximum deviation ±20°), otherwise the turbopump could become dirty.

Installation position with oil-sealed backing pump

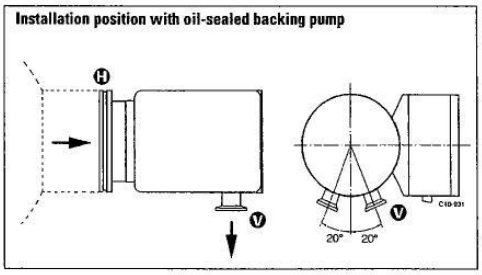

No forces from the piping system must be allowed to act on the pump where turbopumps are anchored.
Suspend or support all pipes to the pump.

Fitting The Splinter Shield

Insert the splinter shield in the high vacuum flange in such a way that the corrugation of the strainer points outwards.

- ➡ Bend the clamping lugs slightly outwards so that subsequently the splinter shield is seated firmly in the high vacuum flange (to avoid noise).
- ➡ Insert the splinter shield in the high vacuum flange while pressing the clamping lugs slightly inwards.
- ➡ Press the outer ring of the splinter shield up to the limit stop point in the high vacuum flange.

Inserting the splinter shield

12 Splinter shield
12a Clamping lug

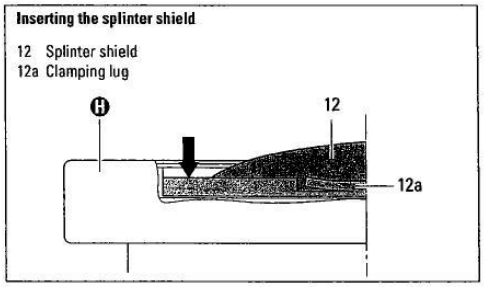

3.3. Connecting The Fore-Vacuum Side

Backing pump:	Vacuum pressure ≤ 10 mbar
Recommendation:	Oil-Free Diaphragm Pump or Rotary Vane Vacuum Pumps from the PFEIFFER range (note installation position, turbopump, see Section 3.2.).

Connecting the backing pump

All connections of the fore-vacuum line: with the usual small flange components or hose screw connections.

Be sure to conduct away the exhaust gases from the backing pump. Do not reduce the free cross section of the fore-vacuum flange with following components.

The exhausted process gases and vapours can represent a health hazard and can also be environmentally damaging.
Comply with all the gas manufacture's safety instructions.

- ➡ With rigid pipe connections: fit a bellows in the connecting line to reduce vibration.
- ➡ The electrical connection of the backing pump is made via a relay box whose control line is connected to "FV PUMP" on the TC 600.

Please refer to Operating Instructions PT 800 030 BN for details on the relay box, backing pump and its installation.

3.4. Connecting The Cooling Unit

Turbopumps TMH 071 P/TMU 071 P can optionally be provided with enhanced convection cooling, air cooling or water cooling.

The turbopumps must be operated with air or water cooling where the fore-vacuum pressure is increased (> 2 mbar) and/or operations with gas loads.

Use and installation:
- For water cooling please refer to Operating Instructions PM 800 546 BN.
- For air cooling please refer to Operating Instructions PM 800 543 BN.
- Permissible installation positions for the cooling unit where convection cooling is involved please see Section 9.1. "Dimensions Diagram".

3.5. Connecting The Venting Valve

The venting valve provides automatic venting in the event of a power failure and switching off.

Fitting the venting valve

➡ Unscrew the venting screw from the venting connection of the turbopump.

➡ Screw in venting valve 42 with seal (USIT ring) on hexagonal SW 14.

Electrical connection

➡ Plug control lead 42a into the connection "VENT" of the TC 600 (8) on the turbopump.

The venting mode of the venting valve is selected via the DCU or Serial Interface RS 485.

Connecting the venting valve

8 Electronic Drive Unit TC 600
42 Venting valve
42a Control lead venting valve/TC 600
42b Plug

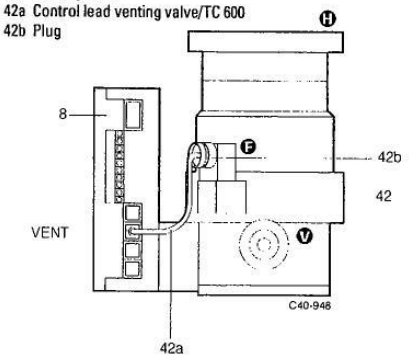

The maximum pressure at the venting valve is 1.5 bar absolute.

Please refer to Operating Instructions PM 800 507 BN for

3.6. Connecting The Casing Heating Unit

The attainment of final pressures is accelerated when turbopumps and vacuum chambers are baked out.
The heating duration is dependent on the degree of dirt and on the required final pressure level. The heating duration should be at least 4 hours.

Please note:
Where casing heating is involved the turbopump must be water cooled.

High temperatures are generated when the turbopump is baked out. There is a danger of burns resulting from touching hot parts, even after the casing heating has been switched off.
Ideally, the heating sleeve.and the pump casing should be insulated during installation. Do not touch the heating sleeve and the pump casing during the baking out process.

Please refer to Operating Instructions PM 800 542 BN for details on the casing heating unit and its installation.

3.7. Connecting The Electronic Drive Unit TC 600

Please note:
The turbopump and the Electronic Drive Unit TC 600 are connected and together form a single unit.
Connecting cable 8a has to be ordered separately (see "Accessories").

- ➡ Connect plug X4 on connecting cable 8a with connection X4 on the TC 600 and secure with screw 8b.
- ➡ Connect plug X2 on connecting cable 8a with power unit TPS 100/DCU 100 ("Accessories") on connection X2.

CAUTION

Once operations voltage has been supplied, the TC 600 performs a self test on the supply voltage. The supply voltage for Turbomolecular Pumps TMH 071 P/TMU 071 P is 24 VDC ±5% in accordance with EN 60 742.

3.8. Installing The Power Unit

CAUTION

Voltage may only be supplied with the PFEIFFER power units (Accessory). These power units guarantee voltage which is safely separated from the mains (in accordance with Standard EN 60 742). The use of other power units requires the express agreement of the manufacturer.

Please refer to Operating Instructions PM 800 521 BN for details on Power Unit TPS 100.

3.9. Connecting The Sealing Gas Valve

To protect the pump, particularly where corrosive or dust producing processes are involved, it is necessary to use sealing gas. Connection is made via the sealing gas valve (please see "Accessories").
Please refer to Section 9.1. "Dimensions Diagram" for the sealing gas connection.

Please refer to Operating Instructions PM 800 229 BN for details on installing the sealing gas valve and adjusting the sealing gas flow.

Connecting the TC 600 with Power Unit TPS 100/DCU 100

X1 Mains connection
X2 Connection, power unit
X4 Connection TC 600
S1 ON/OFF switch
8 Electronic Drive Unit TC 600
8a Connecting cable, TC 600 – TPS/DCU
8b Screw
105 Power unit

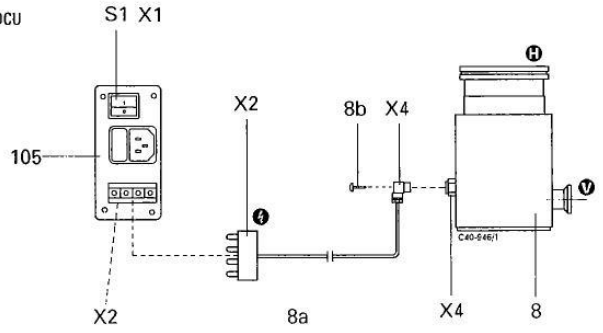

3.10. Connecting The Remote Control Unit

Remote control options for various functions are provided with the connection "REMOTE" on the TC 600 via the 10 pole screw connector plug (maximum cable cross section 0.14-1.5 mm^2/connection). Shielded cable should be used. Shielding is with the cable clamp on the plug side of the TC 600 connected to the TC casing.

The inputs 2-6 are activated by connecting them to the + 24 V on pin 1 (active high) (please see Section 3.12. "Connection Diagram").

Pin occupancy and remote plug functions
(please see following table).

CAUTION

When connecting supply voltage, the turbopump is started.
On delivery:
Pin 1, Pin 2, Pin 3 and Pin 4 are bridged in the mating plug.

Pin occupancy and remote plug functions		
Pin nr.	**Input open (low)**	**Input closed (high) on + 24V (pin 1)**
1	+24 V	
2	venting blocked (see Section 3.5.)	venting released (see Section 3.5.)
3	motor, turbopump off	motor, turbopump on: the turbopump is driven, current flows through the motor coils
4	pumping station off	pumping station on: the turbopump is driven, backing pump is started via the relay box
5	heating off	heating on: the heating is switched on once the rotation speed switchpoint is attained and off when the rotation speed switchpoint is unattained
5		reset: by supplying a pulse (T < 2s) with an amplitude of 24V a malfunction acknowledgement can be processed
6	standby off	standby on: pump is accelerated to 66% of its nominal rotation speed
7	rotation speed setting mode off	the rotation speed can be changed by feeding a PWM signal to this pin or via Serial Interface RS 485 (see Section 4.6. "Rotation Speed Setting Mode")
8	**Output (low)** rotation speed switchpoint not attained	**Output (high)** rotation speed switchpoint attained; output can be loaded with 24 V/50 mA
9	**Output (low)** Collective malfunction message	**Output (high)** malfunction-free operations; output can be loaded with 24 V/50 mA
10	Mass (ground)	————

3.11. Connecting The Serial Interface RS 485

An external operating component (DCU 001/DCU 100) or an external computer can be connected via the connection "RS 485" on the TC 600 with the use of an 8 pole modular connecting cable.

The serial interface is galvanically and safely separated from the maximum supply voltage from the TC 600.

Connection

Designation	Value
Serial interface type:	RS 485
Baud rate:	9600 Baud
Data file word length:	8 bit
Parity:	no parity
Start bits:	1
Stop bits:	1..2

The electrical connections in the TC 600 are optically decoupled.

Pin	Occupancy
1	not connected
2	+ 24 V output (loadable with ≤ 210 mA)
3	not connected
4	not connected
5	RS 485: D+ (DO / RI)
6	Gnd
7	RS 485: D- (DO / RI)
8	not connected

RS 485

1 ... 8

(View from the plug side of the TC 600)

Please note:
It is possible to connect an RS 232 (e.g. PC) via a level converter (please see "Accessories").

Connecting The RS 485

Connection to a fixed bus system

- ➡ Connect all units with D+ (pin 5 / RS 485) and D- (pin 7 / RS 485) to the bus.
- ➡ The bus must be closed at both ends.

The connections should be made in accordance with the specification of the Serial Interface RS 485.

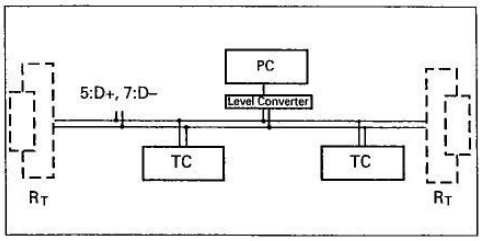

All units connected to the bus must have differing serial interface addresses (parameter 797).

The group address of the TC 600 is 960.

Only SELV may be connected to the Serial Interface RS 485.

All switched on remote functions have priority over the serial interface functions.

Please note:
Please refer to Operating Instructions PM 800 488 BN for detailed operating procedures and electrical data in respect of the Serial Interface RS 485.

Profibus DP Gateway TIC 250 is available (accessory) for connecting an Electronic Drive Unit TC 600 to a Profibus DP. Please refer to the respective Operating Instructins PM 800 599 BN for detailed information on the operation of the TIC 250.

3.12. Connections Diagram

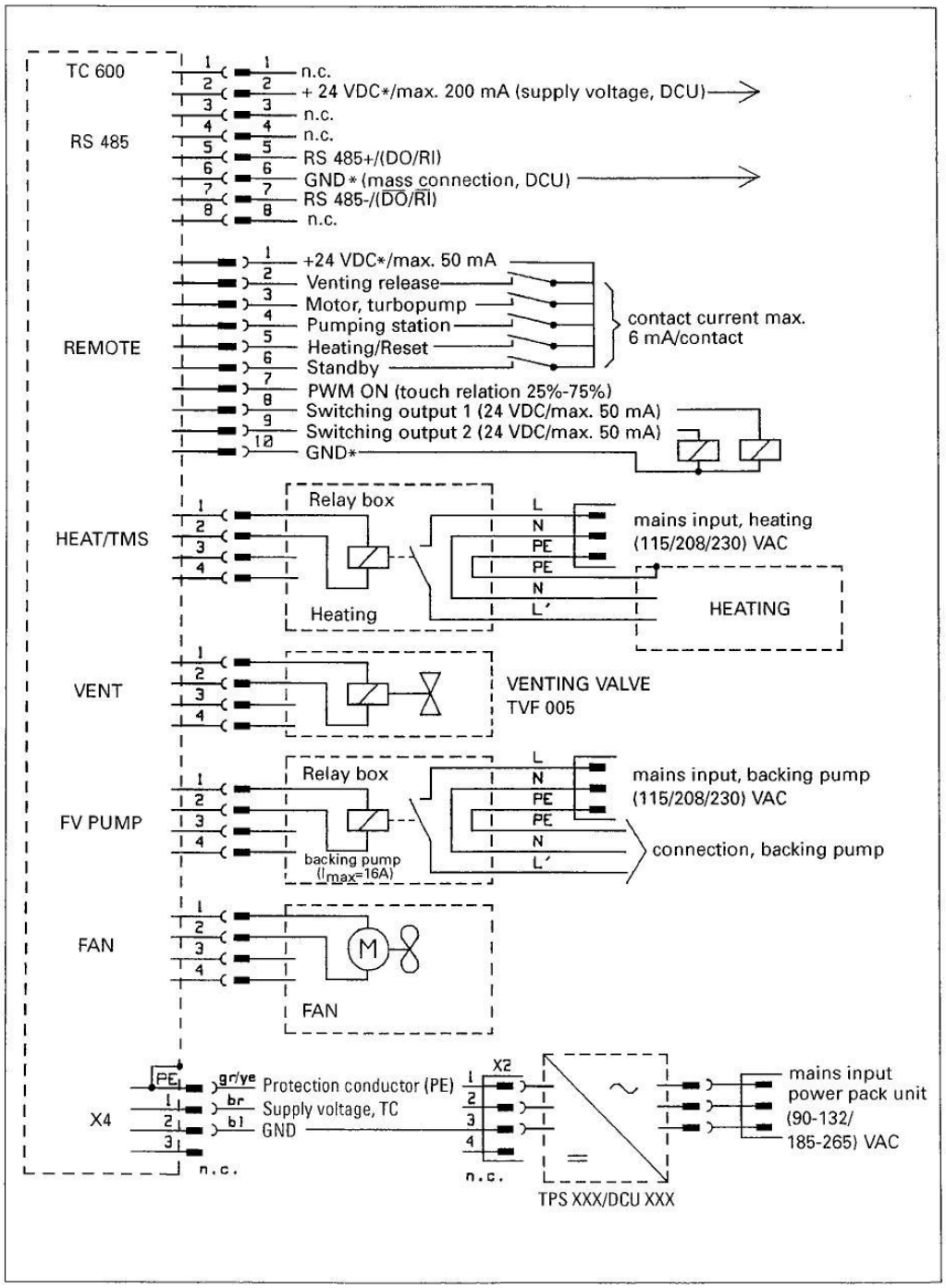

4. Operations

4.1. Before Switching ON

Sections 4.1. to 4.3. refer only to operating the pump in its condition on delivery, without the DCU operating unit. The bridges "venting release", "motor, TMP ON" and "pumping station ON" are fitted in the remote control plug.

Turbopump rotors rotate at high speed. When the high vacuum flange is open there is a danger of injury and of damage to the pump caused by objects falling into the pump.
Therefore never operate the pump with open high vacuum flange.

➡ With water cooling: Open cooling water supply and check flow.
➡ Plug connecting cable 8a ("Accessory") into the TC 600 and connect with Power Unit TPS 100 on X2 (please see Section 3.7.).

Please note:
The following pre-settings have been programmed:

– Running up time	8 min
– Rotation speed switchpoint	80%
– Automatic venting	50%

These settings can only be altered via Serial Interface RS 485 (DCU or PC); please refer to the respective operating instructions.

Take care when pumping hazardous gases and observe the safety precautions of the gas manufacturer.

4.2. Switching ON

➡ Switch on the turbopump with switch S1 on the power unit.
– With air cooling the cooling fan is also switched on via Electronic Drive Unit TC 600.
– Once the self test has been successfully completed on the TC 600 (duration approximately 10 seconds), both the turbopump and the backing pump (if connected) begin operating.

Rear panel, TPS 100

S1 ON/OFF switch
X1 Mains connection
X2 Connection TC 600
F1 Fuse
F2 Fuse

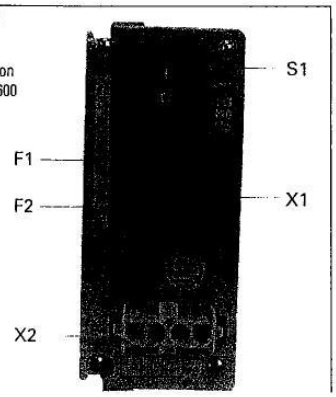

4.3. Switching OFF And Venting

Before coming to rest after switching off, the turbopump must be vented in order to prevent contamination.
➡ Switch off both turbopump and backing pump with switch S1 on the power unit.
➡ Open the venting screw (on delivery, screwed in) on the venting connection slowly about one turn.

The minimum venting time to atmospheric pressure is 30 seconds.

➡ Where water cooling is involved shut off the supply of water.

4.4. Shutting Down For Longer Periods

If aggressive or hazardous gases are pumped there is a danger of personal injury resulting from coming into contact with process gases. Before removing a turbopump from the system, first:

– Vent the turbopump with a neutral gas or dry air.
– Ensure that there is no residual process gas in the system nor in the feeder lines.

If the turbopump is to be shut down for more than a year:
➡ Remove turbopump from the system.
➡ Change the lubricant reservoir (see Section 7.1.).
Please note: Lubricant TL 011 should not be used when there have been no operations for **2 years**.
➡ Close the high vacuum flange and evacuate the turbopump via the fore-vacuum flange.
➡ Vent turbopump via the venting connection with nitrogen or dry air.
➡ Close fore-vacuum and venting connection by blank flanging.
➡ Place the pump vertically on its rubber feet.
➡ In rooms with moist or aggressive atmospheres, the turbopump must be air-sealed in a plastic bag together with a bag of dessicant, e.g silicagel.

Important:
If the pump has been shut down for **3 years**, the bearing must be changed (please contact PFEIFFER Service).

4.5. Operations With The DCU 001/DCU 100

Operations with the DCU 001 or DCU 100 should be carried out in accordance with the relevant Operating Instructions PM 800 477 BN (DCU description) and PM 800 547 BN (operating the pump with the DCU).

4.6. Gas Type Dependent Operations

CAUTION

Water cooling is required if the pumps are to be operated with gas load.

Where high level gas loads and rotation speeds are involved, the resulting friction subjects the rotor to the effect of great heat. To avoid over-heating, a power rotation speed characteristic line is implemented in the TC 600; this ensures that where maximum gas loads are involved, the pump will operate at any rotation speed without the danger of damage arising.
The maximum power is dependent on the type of gas. Two characteristic lines are available for any type of gas in order to fully exploit the power potential of the pump:

- "Gas-Mode 0" for gases with molecular mass ≥ 40 as, for example, Argon;
- "Gas-Mode 1" for all lighter gases.

➡ Set the applicable gas mode on the TC 600 via the DCU (please refer to Operating Instructions "Pumping operations with The DCU" PM 800 547 BN).

BEWARE

Pumping gases with molecular mass ≥ 40 with the incorrect gas mode can cause damage to the pump.

For the vertex of the power characteristic line please refer to Section 8. Technical Data.

Maximum power is applied when the pump starts in order to limit the time required. Once the set rotation speed is attained, switching to the selected power characteristic line is automatic.
If the gas dependent maximum power is exceeded, the rotation speed is reduced until equilibrium between the permissible power and gas friction is attained. The power limitation serves to protect the pump against thermal overloading. In order to avoid rotation speed fluctuations it is recommended to set, in rotation speed setting mode, the equilibrium frequency or a somewhat lower frequency.

Please note:
There can be types of pump whereby there is no differentiation between the two "gas modes" settings.

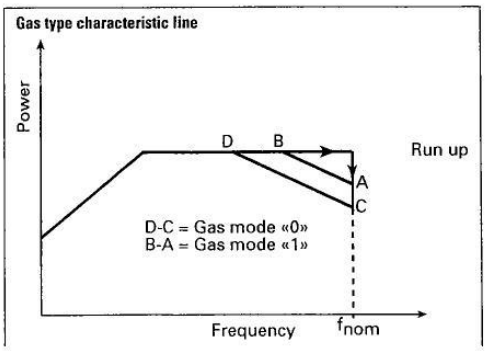

4.7. Operations With The Remote Control Unit

(please refer to the table in Section 3.10.).
Remote control operations can be performed via the connection with the designation "REMOTE" on the TC 600.
The connection is via a 10 pole screwed connector plug with the following occupancy:

1 – + 24 V
2 – Input, venting release
3 – Input, turbopump motor
4 – Input, pumping station
5 – Input, heating/reset
6 – Input, standby
7 – Input, PWM
8 – Switching output 1: Rotation speed switchpoint
9 – Switching output 2: Collective malfunction message
10 – Mass

Inputs 2 - 6 are activated if they are connected with the 24 V on pin 1 (active high).

CAUTION

On delivery there is a bridge between Pin 1, Pin 2, Pin 3 and Pin 4 on the TC 600 mating plug.
Once operating voltage has been supplied and on successful completion of the self-test on the TC 600, the turbopump and any possible connected backing pump is started.

Venting Release (Optional)

Automatic venting:

When turbopump or pumping station is switched off, the venting valve opens for 0.3 seconds when the venting frequency drops below 50% of the final rotation speed (750 Hz); it then closes for 10 seconds and opens again for the venting duration of 3600 seconds (1h).
In the event of a mains power failure the venting valve opens for 0.3 seconds when the venting frequency drops below 50% of the nominal rotation speed.
When mains power is restored the venting procedure is interrupted.

Venting blocked:
Venting does not take place.

Other venting modes:
Other venting modes can be selected via the DCU.

Motor, Turbopump

When the pumping station is switched on and once the self test has been successfully completed (duration approximately 10 seconds), the turbopump is set in operation.
During operations, the turbopump can be switched on and off while the pumping station is switched on.

Pumping Station

Any connected pumping station components are started up (e.g. backing pump, venting valve, air cooling) and with simultaneous activation of the input "motor, turbopump" the turbopump is set in operation once the self test has been successfully completed (duration approximately 10 seconds).

Heating/Reset

Heating (optional)

Once the rotation speed switchpoint is attained the heating unit is switched on; when the rotation speed switchpoint is fallen below the heating unit is switched off.

Reset

The heating input has two functions (please see Section 3.10., point 5 "Reset").

Standby

The pump can be operated optionally at 66% of its nominal rotation speed (standby ON) or at its nominal rotation speed (standby OFF).

Rotation Speed Setting Mode Via Input PWM

The supply of pulse width modulated signals (PWM) with a ground frequency of 100 Hz ±20% with an amplitude of maximum 24 V and a key ratio of 25-75% enables the rotation speed to be set in the range 20-100% of the nominal rotation speed.

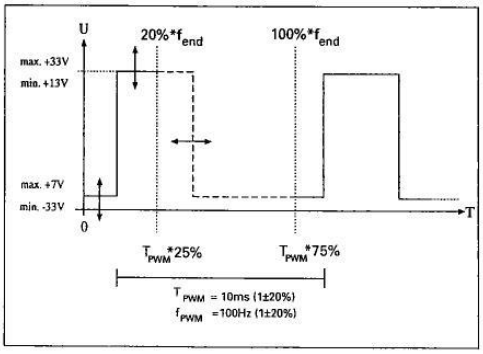

f no signal is present the pump accelerates up to its final rotation speed.
A PWM adapter box for rotation speed setting operations for the turbopump is available as an option (please see "Accessories").

Switching Outputs

Switching outputs 1 and 2 can be loaded with a maximum 24 V / 50 mA per output. The following functions are assigned to the switching outputs:

Switching output 1: Active high when the rotation speed switchpoint is attained. The switchpoint for the turbopump is set at 80% of the nominal rotation speed. It can be used, for example, for a message "pump ready to operate".

Switching output 2: Active low with a malfunction - collective malfunction message

The connection of a relay is made between pin 10 (mass) and the respective switching output pin 8 or pin 9 (see Section 3.12. Connections Diagram).

5. Monitoring Operations

5.1. Operations Display Via LED

Certain operations modes of the turbopump and the TC 600 can be ascertained via the two integrated LEDs located on the front panel of the TC 600.

The following operations modes are displayed:

LED		Cause
Glows green		– Power unit OK – Function "pumping station ON" carried out
Flashes green		– Power unit OK – Pumping station OFF
Blinks green		– Mains power supply failure
	Glows red	– Collective malfunction (for example, run-up time error, over-temperature, turbopump or TC 600) – Switching output 2 active (low)
	Blinks red	– Warning (e.g. supply voltage short circuit to earth, mains power failure)

Please Note:
Differentiated malfunction and warning signals are only possible with the use of the DCU.

5.2. Turbopump Temperature Management

Where impermissible motor temperatures are involved or the temperature of the casing is too high, the motor current is reduced.
This can lead to dipping below the set rotation speed switch-point and results in the turbomolecular pump being switched off.
LED on the TC 600 glows red: Collective malfunction.

6. What To Do In Case Of Breakdowns?

Problem	Possible Causes	Remedy
Pump doesn't start; None of the integrated LEDs glow on the TC 600	• Power supply interrupted • Incorrect operations voltage supplied • Pins 1-3 and 1-4 on the remote plug not connected • No supply of operations voltage • Defect TC 600 • Reduction in the voltage in the cable	• Check fuse in the power pack unit • Check plug contacts on the mains power unit • Check power unit feeder line • Check voltage on the power unit (24 V DC) at connection X2 • Supply correct operations voltage • Connect pins 1-3 and 1-4 on the remote plug • Check plug contacts on the power unit • Inform PFEIFFER Service of need for repair • Use suitable cable
Pump doesn't attain nominal rotation speed within the set run-up time Pump cuts out during operations	• Fore-vacuum pressure too high • Leak or too much gas • Rotor sluggish caused by defective bearing • TC run-up time too short • Thermal overloading caused by – Water flow insufficient – Insufficient air supply – Fore-vacuum pressure too high – Ambient temperature too high	• Check backing pump function • Check seals • Seek leak and repair • Reduce supply of process gas • Check bearing (noises?):Inform PFEIFFER Service • Set longer start-up time with the DCU or PC • Ensure free flow • Ensure adequate air supply • Reduce fore-vacuum pressure • Reduce ambient temperature
Pump doesn't attain final pressure	• Pump dirty • Leak in vacuum chamber, lines or pump	• Bake out pump • If seriously contaminated: Request PFEIFFER Service to clean • Seek leak starting with vacuum chamber • Repair leak
Unusual operating noises	• Bearing damaged • Rotor damaged • Splinter shield (if fitted) not seated firmly	• Inform PFEIFFER Service of need for repair • Inform PFEIFFER Service of need for repair • Check seat of splinter shield (see Section 3.2.)
Red LED on the TC 600 glows	• Collective malfunction	• Reset via mains OFF/ON or remote pin 5 • Different malfunction display with the DCU possible
Red LED on the TC 600 flashes	• Warning through: – Mains power failure – Supply voltage short circuit to earth	• Different warning message with the DCU possible • Check power unit voltage • Check power unit mains connection • Check power unit voltage for short circuit to earth

7. Maintenance

Important
No liability for personal injury nor material damage will be accepted for damages and operational interruptions which have been caused by improper maintenance; in addition, all guarantees become invalid.

- You can change the lubricant reservoir yourself (please see Section 7.1.).
- Your pump can be cleaned on the spot if it is not very dirty. Your local PFEIFFER Service can advise you regarding cleaning procedures and any other maintenance and service work.

Apply no mechanical stress to the TC 600.

7.1. Replacing The Lubricant Reservoir

The lubricant reservoir should be replaced at least once a year.
Where extreme operating conditions or unclean processes are involved, the replacement interval should be checked with your PFEIFFER Service Center.

- ➡ Switch off the turbopump, vent to atmospheric pressure (see Section 4.3.) and allow to cool as necessary.
- ➡ If necessary, remove the turbopump from the system.
- ➡ Unscrew rubber feet 6 from the underside of the pump.
- ➡ Remove the locking cover 90 on the underside of the pump with suitable tool (order number PV M040 550 AX or adjusting pin key); take care with the O-ring 91.
- ➡ Lever out the lubricant reservoir with the help of two screwdrivers.

Lubricants can contain toxic substances from the medium pumped. Lubricant must be disposed of in accordance with the respective regulations.
Safety instructions data sheet on request.

Remove locking cover and extract lubricant reservoir

6 Rubber feet (4x)
90 Locking cover
91 O-ring
92 Lubricant reservoir
93 O-ring
A Tool

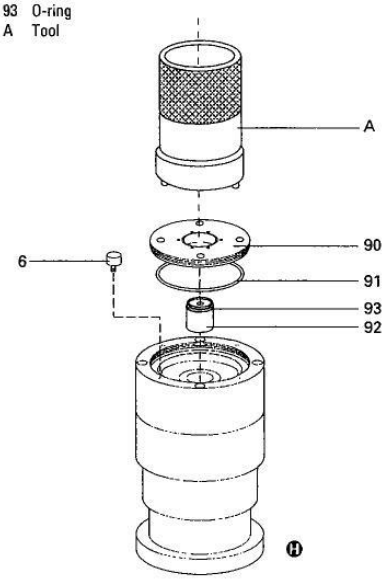

- ➡ Clean off any dirt on the pump and locking cover with a clean, fluff-free cloth.
- ➡ Insert new lubricant reservoir 92 which is already filled with Lubricant TL 011 up to the O-ring 93 in the pump.
- ➡ Screw in locking cover 90 with O-ring 91. The lubricant reservoir is brought into the correct axial position with the locking cover.
- ➡ Screw the rubber feet 6 back in.

8. Service

Do Make Use Of Our Service Facilities
In the event that repairs are necessary a number of options are available to you to ensure any system down time is kept to a minimum:
- Have the pump repaired on the spot by our PFEIFFER Service Engineers;
- Return the pump to the manufacturer for repairs;
- Replace the pump.

Local PFEIFFER representatives can provide full details.

Please take into account that where PFEIFFER Service replacement service is involved the standard operating parameters are always preset.
If your application requires different parameters, please modify accordingly.

Please note:
The turbopump and the Electronic Drive Unit TC 600 form a single unit and must therefore be returned complete for repair purposes. Before returning the unit it should be ensured that the power unit is not the cause of the malfunction (checking the power unit).

Before Returning:
➡ Please attach a clearly visible notice "Free of harmful substances" (both on the unit and also on the delivery note and any accompanying letters).

"Harmful substances" are substances and preparations as defined in the current, local, dangerous substances regulations; in the U.S.A. as
"materials in accordance with the Code of Federal Regulations (CFR) 49 Part 173.240 Definition and Preparation".
We will carry out the decontamination and invoice this work to you if you have not attached this note. This also applies where the operator does not have the facilities to carry out the decontamination work. Units which are contaminated microbiologically, explosively or radioactively cannot be accepted as a matter of principle.

Fill Out The Declaration Of Contamination
➡ In every case the "Declaration of Contamination" must be completed diligently and truthfully.
➡ A copy of the completed declaration must accompany the unit; any additional copies must be sent to your local PFEIFFER Service Center.

Please get in touch with your local PFEIFFER representatives if there are any questions regarding contamination.

Decontaminate units before returning or possible disposal. Do not return any units which are microbiologically, explosively or radioactively contaminated.

Returning Contaminated Units
If contaminated have to be returned for maintenance/repair, the following instructions concerning shipping must be followed:
➡ Neutralise the pump by flushing with nitrogen or dry air.
➡ Seal all openings to the air.
➡ Seal pump or unit in suitable protective foil.
➡ Ship units only in appropriate transport containers.

Please Note:
Repair orders are carried out according to our general conditions of sale and supply. If repairs are necessary, please send the pump to your nearest PFEIFFER Service Center.

Contact Addresses And Telephone Hotline
Contact addresses and telephone numbers can be found on the back cover of these operating instructions.

9. Technical Data

Feature	Unit	TMH 071 P	TMH 071 P	TMU 071 P
Connection nominal diameter				
Inlet		DN 40 ISO-KF	DN 63 ISO-K	DN 63 CF-F
Outlet		DN 16 ISO-KF/G 1/4"	DN 16 ISO-KF/G 1/4"	DN 16 ISO-KF/G 1/4"
Venting connection		G 1/8"	G 1/8"	G 1/8"
Nominal rotation speed	1/min	90 000	90 000	90 000
Standby rotation speed	1/min	60 000	60 000	60 000
Start-up time	min	2	2	2
Noise level	dB (A)	< 45	< 45	< 45
Final pressure, backing pump	mbar	< 10	< 10	< 10
Maximum permissible rotor temperature	°C	90	90	90
Permissible heat radiation power	W	4	4	4
Volume flow rate for				
Nitrogen N_2	l/s	33	60	60
Helium He	l/s	38	55	55
Hydrogen H_2	l/s	39	45	45
Compression ratio for				
N_2		$> 10^{11}$	$> 10^{11}$	$> 10^{11}$
He		$1 \cdot 10^7$	$1 \cdot 10^7$	$1 \cdot 10^7$
H_2		$> 10^5$	$> 10^5$	$> 10^5$
Maximum fore-vacuum pressure for				
N_2	mbar	18	18	18
He	mbar	17	17	17
H_2	mbar	8	8	8
Maximum gas throughput[1]				
With water cooling N_2	mbar l/s	1.1	1.1	1.1
He	mbar l/s	2.5	2.5	2.5
Withe air cooling[2] N_2	mbar l/s	0.45	0.45	0.45
Maximum gas throughput at intake pressure of 0.1 mbar[3]				
With water cooling N_2	mbar l/s	2.2	2.2	2.2
He	mbar l/s	2.6	2.6	2.6
H_2	mbar l/s	2	2	2
Vertex power characteristics line[4]				
A	W / Hz	80 / 1500	80 / 1500	80 / 1500
B	W / Hz	80 / 1500	80 / 1500	80 / 1500
C	W / Hz	55 / 1500	55 / 1500	55 / 1500
D	W / Hz	80 / 1300	80 / 1300	80 / 1300
Final pressure[5]				
With rotary vane pumps	mbar	$< 1 \cdot 10^{-10}$	$< 1 \cdot 10^{-10}$	$< 1 \cdot 10^{-10}$
With diaphragm pumps	mbar	$< 1 \cdot 10^{-9}$ [6]	$< 1 \cdot 10^{-9}$ [6]	$< 1 \cdot 10^{-9}$ [6]
Lubricant		TL 011	TL 011	TL 011
Maximum cooling water consumption with water at 15 °C[7]	l/h	100	100	100
Cooling water temperature	°C	5 - 25	5 - 25	5 - 25
Permissible ambient temperature with air cooling	°C	0 - 35	0 - 35	0 - 35
Heating power consumption	W	32	32	32
Weight	kg	2.8	2.8	3.5
Permissible magnetic field	mT	4	4	4
Operating voltage	VDC	24 ± 5%	24 ± 5%	24 ± 5%
Duration[7] - / max. current consumption	A	4.1 / 4.6	4.1 / 4.6	4.1 / 4.6
Duration[7] - / max. power	W	100 / 110	100 / 110	100 / 110
Protection class		IP 30	IP 30	IP 30
Relative humidity	%	5-85 non-condensing	5-85 non-condensing	5-85 non-condensing

1) Until frequency fall-off; higher gas throughputs with reduced rotation speed.
2) Until ambient temperature 30 °C
6) Final pressure only attainable with metallic seal on the high vacuum flange (final pressure with viton seal: $< 1 \cdot 10^{-8}$ mbar).

9.1. Dimensions Diagram

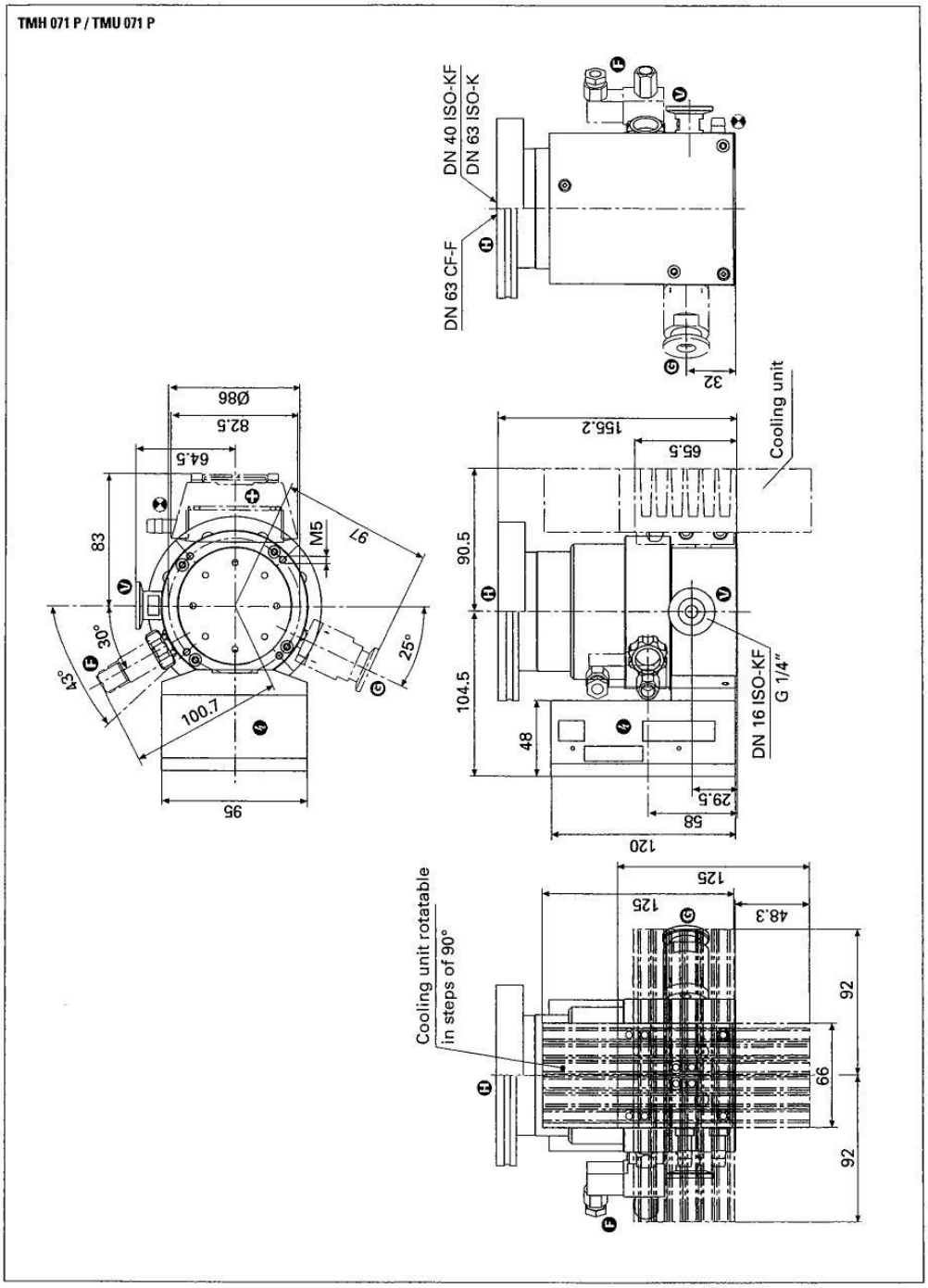

10. Spare Parts

Pos.	Description	Pieces	Size	Number	Comments	Ordering Quantity
	Spare Parts TMH 071 P/TMU 071 P					
	Set of seals	1		PM 087 077 -T		
6	Rubber feet	4		P 3695 700 ZE		
17	USIT ring	1		P 3529 133 -A		
90	Locking cover	1		PM 083 021 -X		
91	O-ring	1	68x3	P 4070 972 PP		
92	Lubricant reservoir	1		PM 073 073 -T		

Spare parts

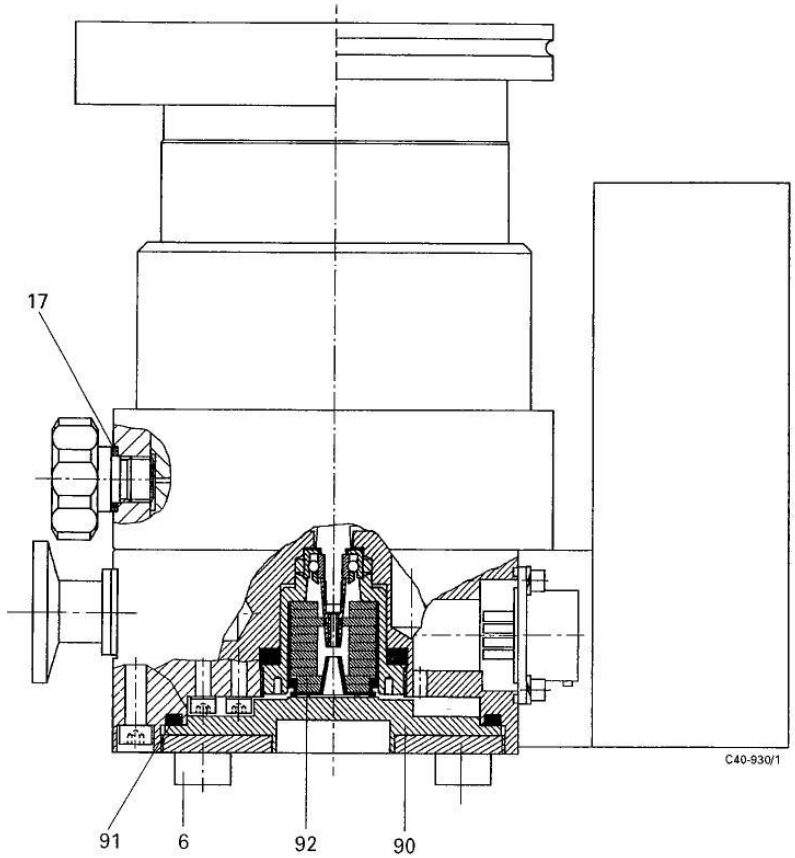

11. Accessories

Description	Size	Number	Comments/ Operating Instructions	Order Quantity
Components for cooling				
Dirt trap	R 3/8"	P 4161 300 2R		
Recycled Water Cooling Unit TZK 400	230 V, 50 Hz	PM Z01 245	PM 800 369 BN	
Air cooling	24 VDC	PM Z01 253	PM 800 543 BN	
Water cooling		PM 016 000 -T	PM 800 546 BN	
Cooling unit for convection cooling		PM 039 237 -T		
Components for venting				
Venting Valve TVF 005, without current closed	24 VDC	PM Z01 135	PM 800 507 BN	
Drying Unit TTV 001 (filled with zeolite)		PM Z00 121	PM 800 022 BN	
Venting flange	DN 10 ISO-KF	PM 033 737 -T		
Components for heating				
Casing heating			Water cooling erforderlich/	
	230 V, Schuko plug	PM 041 900 -T	PM 800 542 BN	
	208 V, UL-plug	PM 041 901 -T	PM 800 542 BN	
	115 V, UL-plug	PM 041 902 -T	PM 800 542 BN	
Other accessories				
Connecting cable TC 600 – TPS/DCU	3 m	PM 051 103 -T	Other lengths on request	
power unit				
– TPS 100; for fitting to walls or standard runners		PM 041 827 -T	PM 800 521 BN	
– TPS 100; 19" insert unit		PM 041 828 -T	PM 800 521 BN	
– DCU 100; 19" insert unit with Operating and Display Control Unit (DCU)		PM C01 694	PM 800 477 BN	
Mains cable				
Schuko plug	230 V	P 4564 309 ZA		
UL plug	208 V	P 4564 309 ZF		
UL plug	115 V	P 4564 309 ZE		
Operating and Display Control Unit DCU 001		PM 041 816 -T	PM 800 477 BN	
Relay box, backing pump				
Schuko plug	230 V	PM 041 920 -T	PM 800 544 BN	
UL plug	208 V	PM 041 921 -T	PM 800 544 BN	
UL plug	115 V	PM 041 922 -T	PM 800 544 BN	
PWM adapter box		PM 051 028 -U	PM 800 563 BN	
Level Converter RS 232/485		PM 051 054 -X	PM 800 549 BN	
Cover plate for TC 600 (IP 54)		PM 051 327 -T	PT 800 024 BN	
Profibus-DP gateway TIC 250		PM 051 357 -T	PM 800 599 BN	
Vibration compensator, TMH	DN 63 ISO-K	PM 006 800-X		
TMH	DN 40 ISO-KF	PM 006 799-X		
TMU	DN 63 CF-F	PM 006 801 -X		
Splinter shield	DN 40 ISO-KF	PM 006 375 -X		
	DN 63 ISO-K	PM 006 376 -X		
Protective grill	DN 63 ISO-K	PM 006 597 -R		
Sealing ring, TMH	DN 63 ISO-K	PF 303 106 -T		
Cu seal (10 pieces), TMU	DN 63 CF	PF 501 406 -T		
Set of screws, TMU	DN 63 CF	PF 505 002 -T		
Sealing gas valve		PM Z01 142	PM 800 229 BN	
Hose nipple for the sealing gas valve	DN 16 ISO-KF-10	PF 144 020		

When ordering accessories and spare parts please be sure to state the full part number. When ordering spare parts please state additionally the unit type and unit number (see rating plate). Please use this list as an order form (by taking a copy).

Declaration of Contamination of Vacuum Equipment and Components

The repair and/or service of vacuum components will only be carried out if a correctly completed declaration has been submitted. Non-completion will result in delay.

The manufacturer could refuse to accept any equipment without a declaration.

This declaration can only be completed and signed by authorised and qualified staff:

1. Description of component:

- Equipment type/model: _____
- Code No.: _____
- Serial No.: _____
- Invoice No.: _____
- Delivery Date: _____

2. Reason for return:

_____
_____
_____
_____
_____

3. Equipment condition

- Has the equipment been used?
  yes ❒ no ❒
- What type of pump oil was used?
  _____
- Is the equipment free from potentially harmful substances?
  yes ❒ (go to section 5)
  no ❒ (go to section 4)

4. Process related contamination of equipment

- toxic yes ❒ no ❒
- corrosive yes ❒ no ❒
- microbiological hazard*) yes ❒ no ❒
- explosive*) yes ❒ no ❒
- radioactive*) yes ❒ no ❒
- other harmful substances yes ❒ no ❒

*) We will not accept delivery of any equipment that has been radioactively or microbiologically contaminated without written evidence of decontamination!

Please list all substances, gases and by-products which may have come into contact with the equipment:

Tradename Product name Manufacturer	Chemical name (or Symbol)	Danger class	Precautions associated with substance	Action if spillage or human contact
1.				
2.				
3.				
4.				
5.				

5. Legally Binding Declaration

I hereby declare that the information supplied on this form is complete and accurate. The despatch of equipment will be in accordance with the appropriate regulations covering Packaging, Transportation and Labelling of Dangerous Substances.

Name of Organisation: _____

Address: _____ Post code: _____

Tel.: _____

Fax: _____ Telex: _____

Name: _____

Job title: _____

Date: _____ Company stamp: _____

Legally binding signature:

PFEIFFER VACUUM

Konformitätserklärung
Declaration of Conformity

im Sinne folgender EU-Richtlinien:
pursuant to the following EU directives:

- **Maschinen/*Machinery* 98/37/EG**
- **Elektromagnetische Verträglichkeit/*Electromagnetic Compatibility* 89/336/EWG**
- **Niederspannung/*Low Voltage* 73/23/EWG**

Hiermit erklären wir, daß das unten aufgeführte Produkt den Bestimmungen der EU-Maschinenrichtlinie 98/37/EG - Anhang IIA, der EU-Richtlinie über elektromagnetische Verträglichkeit 89/336/EWG und der EU-Niederspannungsrichtlinie 73/23/EWG entspricht.

We hereby certify that the product specified below is in accordance with the provision of EU Machinery Directive 98/37/EEC - Annex II A, EU Electromagentic Compatibility Directive 89/336/EEC and EU Low Voltage Directive 73/23/EEC.

Produkt/*Product*:

TMH 071 P
TMU 071 P

Angewendete Richtlinien, harmonisierte Normen und angewendete, nationale Normen:

Guidelines, harmonised standards, national standards which have been applied:

EN 292-1
EN 292-2
EN 294
EN 61 010
EN 55 011

Unterschrift/*Signature:*

Pfeiffer-Vacuum GmbH
Emmeliusstrasse 33
35614 Asslar
Germany

(W. Dondorf)
Geschäftsführer
Managing Director

Konf.I/2000

PFEIFFER VACUUM

Zentrale/Headquarters

Pfeiffer Vacuum GmbH

Emmeliusstrasse 33
D-35614 Asslar

Telefon 06441/802-0
Telefax 06441/802-202
Hotline 06441/802-333
Internet:
http://www.pfeiffer-vacuum.de

Argentina
ARO S.A., Casilla de Correo 4890,
1000 Buenos Aires, telephone +54 / 1 331 3918,
telefax +54 / 1 331 3572

Australia
Balzers Australia Pty. Ltd., Level 1,
3, Northcliff Street, Milsons Point, NSW 2061,
telephone +61 / 2 9954 1925, telefax +61 / 2 9954 1939

Austria
Pfeiffer Vacuum Austria GmbH
Diefenbachgasse 35, A-1150 Wien,
telephone +43 / 1 8941 704, telefax +43 / 1 8941 707
Service Hotline: +43 / 1 8941704

Branch Office, Czech Republic
Pfeiffer Vacuum Austria GmbH, Branch Prague
Zvonarska 885
CZ-156 00 Praha 5
telephone + 420/2 900 42981
telefax + 420/2 579 23014

Belgium / Luxemburg
Pfeiffer Vacuum Belgium N.V./S.A.
Luxemburgstraat 5, B-1940 Temse
telephone +32 / 3 710 5920, telefax +32 / 3 710 5929
Service Hotline: +32 / 3 710 5922

Brazil
Elmi Tec
Assistencia Técnica e Representação S/C Ltda.
Rua Bernadino de Compos, 551
CEP 04620-002 São Paulo, SP - Brasil
telephone +55 / 11 532 0740
telefax +55 / 11 535 3598

Chile
BERMAT S.A., Coyancura 2283, piso 6
Providencia, P.O. Box 9781, Santiago
telephone +56 / 2 231 8877,
telefax +56 / 2 231 4294

Colombia
Arotec Colombiana S.A., Carrera 15 No.38-17
P.O. Box 050 862, Santafe de Bogota / D.C.
telephone +57 / 1 288 7799, telefax +57 / 1 285 3604

Denmark
Pfeiffer Vacuum Scandinavia AB, Vesterengen 2,
DK-2630 Taastrup,
telephone +45 / 43 52 38 00
telefax +45 / 43 52 38 50

France
Pfeiffer Vacuum France SAS
45, rue Senouque, BP 139 F-78531 BUC Cedex
telephone +33 / (0)1 30 83 04 00
telefax +33 / (0)1 30 83 04 04

Germany
Pfeiffer Vacuum GmbH,
Emmeliusstrasse 33, D-35614 Asslar
telephone +49 / 6441 802 400
telefax +49 / 6441 802 399
Service Hotline: +49 / 6441 802 333

Great Britain
Pfeiffer Vacuum Ltd.
2-4 Cromwell Business Centre
Howard Way, Interchange Park
Newport Pagnell, MK16 9QS, United Kingdom
telephone +44 / 1 908 500615
telefax +44 / 1 908 500616

Greece
Analytical Instruments S.A., 1 Mantzarou St.,
GR-15451 Athens,
telephone +30 / 1 674 8973
telefax +30 / 1 674 8978

India
Pfeiffer Vacuum India Ltd.
25-E Nicholson Road, Tarbund
Secunderabad 500 009,
telephone +91 / 40 775 0014, telefax +91 / 40 775 7774

Israel
ODEM Scientific Applications,
2 Bergman Street, Science based park
Rehovod
telephone +972 8 9366 101,
telefax +972 8 9366 102

Italy
Pfeiffer Vacuum Italia S.p.a.
Via San Martino, 44 I-20017 RHO (Milano)
telephone +39 / 2 93 99 051, telefax +39 / 2 93 99 05 33

Japan
Hakuto Co. Ltd., C.P.O. Box 25,
Vacuum & Scientific Instruments Division
Tokyo Central 100-91,
telephone +81 / 3 32 258 910
telefax +81 / 3 32 259 009

Korea
Pfeiffer Vacuum Korea Ltd., 3F Haein Building 453,
Dokok-Dong, Kang Nam-Ku, Seoul, 135-270
telephone +82 / 2 3461 0671/5
telefax +82 / 2 3461 0676

Netherlands
Pfeiffer Vacuum Nederland BV
Veldzigt 30a, NL-3454 PW De Meern,
telephone +31 / 30 6666050, telefax +31 / 30 6662794

Peru
Ing. E. Brammertz s.r.l., José Pardo 182,
Apartado 173, PE-18 Miraflores,
telephone +51 / 1 445 8178
telefax +51 / 1 445-1931

Poland
Softrade Sp.z.o.o, ul. Malwowa 35,
PL-60-175 Poznan, telephone +48 / 61 8677 168,
telefax +48 / 61 8677 111

Portugal
Unilaser Lda, Taguspark
Núcleo Central, sala nº 268, Estrada Cacém-
Porto Salvo, P-2780 Oeiras
telephone +351 / 1 421 7733
telefax +351 / 1 421 7744

Singapore
APP Systems Services Pte. Ltd, 2 Corporation Road
06-14 Corporation Place, Singapore 618494,
telephone +65 / 268 2024, telefax +65 / 268 6621

Spain
Tecnovac
Tecnologia de Vacio S.L., Ronda de Poniente, 6 Bajo F
Centro Empresarial Euronova
E-28760 Tres Cantos (Madrid)
telephone +34 / 91 804 11 34,
telefax +34 / 91 804 30 91

Sweden
Pfeiffer Vacuum Scandinavia AB
Johanneslundsvägen 3
S-194 61 Upplands Väsby
telephone +46 / 590 748 10
telefax +46 / 590 748 88

Switzerland
Pfeiffer Vacuum Schweiz S.A.
Förrlibuckstraße 30, CH-8005 Zürich
telephone +41 / 1 444 2255,
telefax +41 / 1 444 2266

South Africa
Labotec Pty Ltd., P.O. Box 6553,
Halfway House
1685 Midrand
telephone +27 / 11 315 5434
telefax +27 / 11 315 5882

Taiwan
HAKUTO Taiwan Ltd. Hsinchu office No. 103,
Hsien Chen 11th Street, Jubei City,
HsinChu County, Taiwan, R.O.C.
(zip/postal code: 302)
telephone +886 / 3 554 1020
telefax +886 / 3 554 0867

Thailand
S & T Enterprises (Thailand) Ltd.
18th Floor, Chokchail Intil Bldg.
690 Sukhumvit Road
Klongton, Klongtoey
Bangkok 10110
telephone +662 / 259 4623
telefax +662 / 259 6243

U.S.A.
Pfeiffer Vacuum, Inc.
24 Trafalgar Square
Nashua, NH 03063-1988
USA
telephone +1/ 603 578 6500
telefax +1/ 603 578 6550

Venezuela
Secotec S.A., Apartado 3452, Caracas 1010-A,
telephone +58 / 2 573 8687
telefax +58 / 2 573 1932

Other countries
AVI - Applied Vaccuum Industries GmbH
Leginglenstrasse 17A; CH-7320 Sargans
Switzerland
telephone +41 / 81 710 03 80
telefax +41 / 81 710 03 81
Scope of represented countries
Armenia, Azerbaijan, Bangladesh, Belarus, Bulgaria, Cambodia, Estonia, Georgia, Hong Kong, Kazakhstan, Kingdom of Nepal, Kirghizia, Latvia, Lithuania, Maldavia, Philippines, P.R. China, Rumania, Russia, Tajikistan, Turkmenistan, Ukraine, Uzbekistan, Vietnam

A.E.M.S.
Advanced Equipment Materials and Systems
P.O. Box 25
Föhrenweg 18
FL-9496 Balzers
telephone +41 / 75 380 0550
telefax +41 / 75 380 0551
Scope of represented countries
Bahrain, Egypt, Iraq, Iran, Jordan, Kuwait, Lebanon, Lybia, Oman, Pakistan, Saudi-Arabia, Sudan, Syria,

Mini gate valve

with pneumatic actuator, double acting

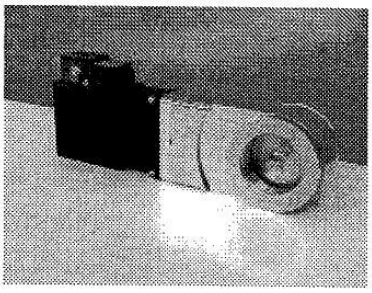

This manual is valid for the valve ordering numbers:
012 . . - . A . . - . . . .

The respective product identification is given on each valve in the following or in a similar way:

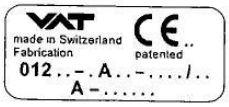

STOP Read these **«Installation, Operating and Maintenance Instructions»** and the enclosed **«General Safety Instructions»** carefully before you start any other action.

Intended use of product

Use product for vacuum applications under the conditions indicated in the chapter «Technical data» only! Other applications are only allowed with the written permission of VAT.

Technical data

Pressure range	1 x 10^{-7} mbar to 2 bar (abs)
Differential pressure on the gate	≤ 2 bar in either direction
Max. Differential pressure at opening	≤ 30 mbar
Admissible temperature: Valve	≤ 150°C open, 150°C closed
Pneumatic actuator	≤ 50°C
Position indicator	≤ 80°C
Solenoid	≤ 50°C
Position indicator: contact rating	0.5 A / 50 V AC, max.10 W
	0.5 A / 75 V DC, max. 10 W
Solenoid	see tag on solenoid

Further data according to VAT catalogue «Vacuum Valves 2000».

Installation into the vacuum system

The valve seat side is indicated by the symbol "▽" on the connection flange.

Admissible forces

Forces from evacuating the system, from the weight of other components, and from baking can lead to deformation of the valve body and to malfunction of the valve. The stress has to be relieved by suitable means, e.g. bellows sections. The following forces are admissible:

DN (nom. I.D.)		Axial tensile or compressive force «FA»		Bending moment «M»	
mm	inch	N	lbf	Nm	lbf · ft
16	5/8	295	66	12	9
25	1	345	77	15	11
40	1½	490	110	23	17
50	2	590	132	29	21
If a combination of both forces («FA» and «M») occurs, the values mentioned above are invalid. Please contact VAT for more information.					

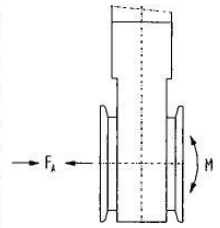

Compressed air connection

Connect compressed air only if
- valve has been installed into the vacuum system
- moving parts cannot be touched

With solenoid: Connect compressed air to **IN** (internal thread R 1/8", 1/8" NPT for USA)
Without solenoid: Connect compressed air to **OPEN** and **CLOSE** (internal thread M5)

Compressed air pressure (min. - max. overpressure): 4.5 - 7 bar / 65 - 100 psig

Use only clean, dry or slightly oiled air!

Position indicator connection

1.)
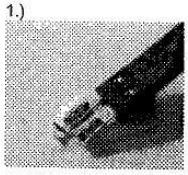

2.)
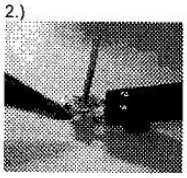

3.)
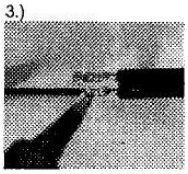

4.)
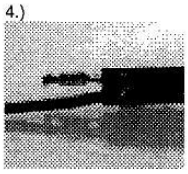

1.) Cut off crimp lug (U shape) and stop lug (touching the body) by menas of pincers
2.) Fill up hollow space with solder material
3.) Insulate cable (approx. 4 mm) and fix cable by soldering
4.) Insert plug completely until the catch lug snaps in properly

Electrical connection

Do not touch electrical parts under voltage!

Connect electrical power only if
- valve has been installed into the vacuum system
- moving parts cannot be touched

Verify that mains voltage matches voltage stated on the solenoid! Sockets for position indicator and solenoid are supplied with the valve.

Wire solenoid and position indicator according to the following diagrams:

Standard solenoid (option)

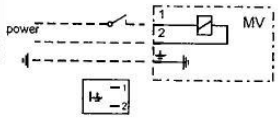

MV = coil of solenoid

Solenoid for impulse actuation (option)

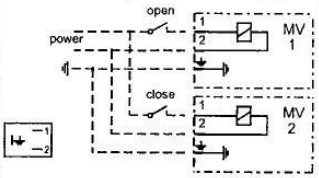

MV1 = coil of solenoid «open»
MV2 = coil of solenoid «closed»

Minimum pulse duration 50 ms
Continuous voltage does not damage the coil

Position indicator

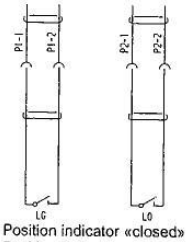

Lg = Position indicator «closed»
Lo = Position indicator «open»

Operation

Normal operation

Valve is opened and closed by means of compressed air.

Admissible temperature

See «Technical data»!

Compressed air failure

Valve closed: valve remains closed
Valve open: valve position is undefined

Power failure

Standard solenoid: valve closes

Solenoid for impulse actuation (option): valve position does not change, but a started movement will be completed

Emergency operation at power failure

In case of a power failure, the valve can be actuated manually if compressed air is available.

Standard solenoid

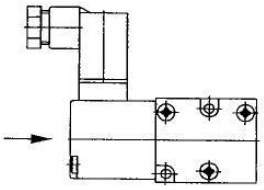

Press push-button: valve opens
Release push-button: valve closes

Solenoid for impulse actuation (option)

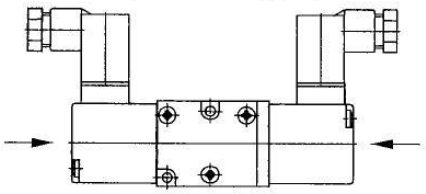

Press push-button: valve opens
Pull push-button: valve closes

Preventive maintenance

Under clean operating conditions, the valve does not require any maintenance during the specified cycle life.

Maintenance

Replacement of the gate

1. Vent chambers on either side of valve
2. Open valve
3. Disconnect compressed air and electrical power from valve
4. Remove bonnet screws (61) in crosswise order
5. Withdraw actuator/mechanism assembly carefully from body
   Attention: Balls (65) can fall out!
6. Spread old gate (21) and remove it carefully (balls will fall out)
7. Put new balls (65) into detents of piston shaft and hold them with thumb and forefinger
8. Clip on new gate (21) (see figure 1)
   Attention: Check whether balls are inserted correctly in their detents
9. Check whether gate is inserted properly
   Attention: Seat side: marking «∇» on body (1)" and gate side without holes (see figure 2)
10. Check and clean sealing surfaces of bonnet O-ring and valve seat
11. Reassemble in reverse order
    Attention: Tighten screws (61) in crosswise order!
    Torque: DN 16/25 1 Nm / 0.74 lbf · ft
    DN 40/50 2 Nm / 1.48 lbf · ft

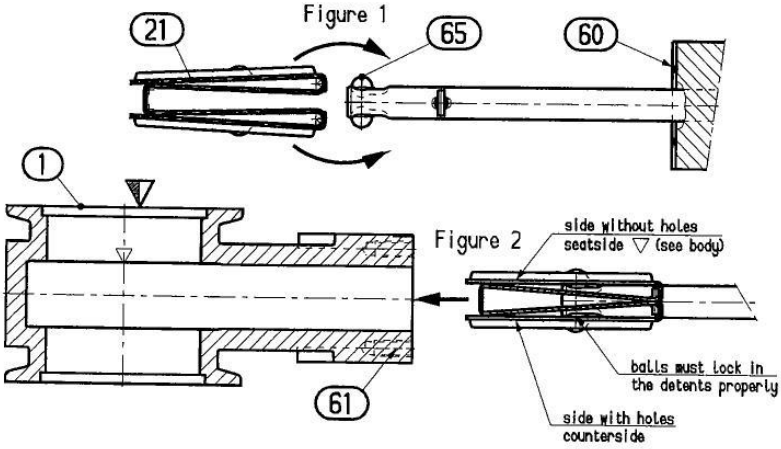

Spare parts

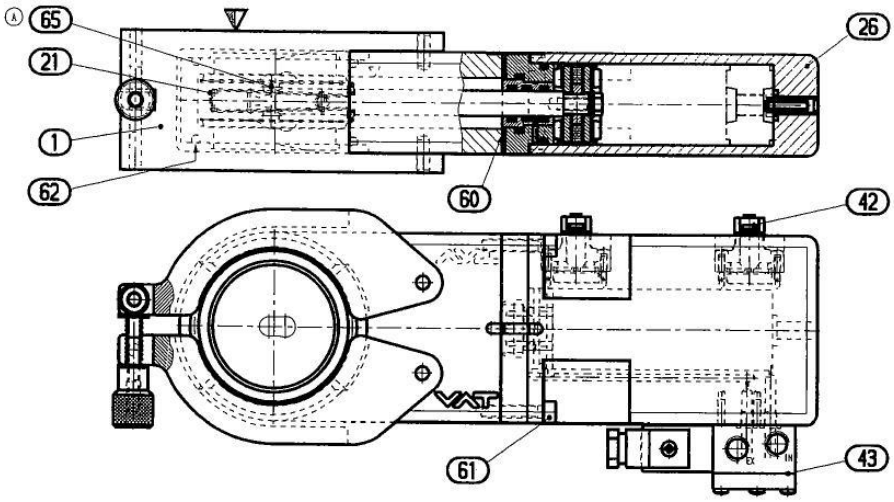

Item	Description	Qty.	VAT part number			
			DN 16	DN 25	DN 40	DN 50
	Valve ordering number		**01224-. A . .**	**01228-. A . .**	**01232-. A . .**	**01234-. A . .**
21 65	Valve mechanism (stop included) Pair of locking balls	1	202201	202200	202199	202198
42	Position indicator	2	92572-R1	92572-R1	92572-R1	92572-R1
43	Solenoid kit	1	94800-R1	94800-R1	94800-R1	94800-R1
60	Bonnet seal O-ring	1	N-5100-019	N-5100-026	N-5100-031	N-5100-033
62	O-ring for ISO-KF quick	2	N-5100-117	N-5100-123	N-5100-224	N-5100-229

Item	Description	Qty.	VAT part number			
			DN 16	DN 25	DN 40	DN 50
	Valve ordering number		**01224-KA . .**	**01228-KA . .**	**01232-KA . .**	**01234-KA . .**
21 60 65	Complete seal kit ISO-KF	1	92578-R1	92554-R1	92485-R1	92523-R1
	Valve ordering number		**01224-BA . .**	**01228-BA . .**	**01232-BA . .**	**01234-BA . .**
21 60 62 65	Complete seal kit ISO-KF Quick	1	96191-R1	96190-R1	96189-R1	96188-R1

Solenoid kit

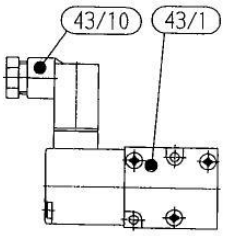

Item	Description	Qty.	Part No.
	Solenoid kit DN50	1	94800-R1
	Solenoid kit DN40	1	94800-R1
	Solenoid kit DN25	1	95080-R1
	Solenoid kit DN16	1	95081-R1
43/1	Solenoid	1	N-7557-018 *)
43/10	Plug	1	N-8501-400

..... *) **Specify voltage!**
(e.g. N-7557-018-**220V 50Hz**)

Solenoid kit: impulse actuation

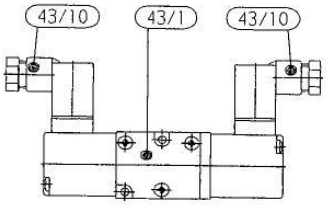

Item	Description	Qty.	Part No.
	Solenoid kit	1	94801-R1
43/1	Solenoid	1	N-7557-021 *)
43/10	Plug	2	N-8501-400

Position indicator: open or closed

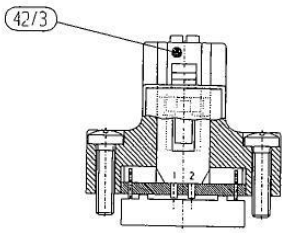

Item	Description	Qty.	Part No.
	Position indicator	1	92572-R1
42/3	Plug including crimping pins	1	N-8503-042

Trouble shooting

Valve does not close/open:	Power available? Compressed air available? Solenoid defective? Check voltage! Check air pressure!
Leak at gate:	Clean valve seat and gate! Replace gate, if damaged! Correct air pressure?
Leak at body:	Flanges leaktight? Replace bonnet seal! Screws at bonnet tightened?

Repairs

Contact VAT for repairs or maintenance. The fabrication No. (012 . . - . A . . - . . . . / . .) marked on the valve body has always to be specified. It has to be individually decided whether the work can be performed by the customer or has to be carried out by VAT.

All supplies (e. g. compressed air, electrical power) have to be disconnected for removal/installation of the valve from/into the system.

Even with disconnected supply, loaded springs and/or air cushions in cylinders can be potential hazards.

Keep fingers and objects away from the valve opening!

Products returned to VAT for repair have to be free of harmful substances such as e.g. toxical, caustic or microbiological ones. For radioactively contaminated products the customer has to fill in the VAT form «Contamination and Radiation Report» and to send it with the product. The form is available at VAT. The maximum permissible values indicated in the form must not be exceeded.

Warranty

Each product sold by VAT Vakuumventile AG (VAT) is warranted to be free from the manufacturing defects that adversely affect the normal functioning thereof during the one-year period immediately following delivery thereof by VAT, provided that the same is properly operated under conditions of normal use and that regular, periodic maintenance and service is performed or replacements made, in accordance with the instructions provided by VAT. The foregoing warranty shall not apply to any product or component that has been repaired or altered by anyone other than an authorized VAT representative or that has been subject to improper installation or abuse, misuse, negligence or accident. VAT shall not be liable for any damage, loss, or expense, whether consequential, special, incidental, direct or otherwise, caused by, arising out of or connected with the manufacture, delivery (including any delay in or failure to deliver), packaging, storage or use of any product sold or delivered by VAT shall fail to conform to the foregoing warranty or to the description thereof contained herein, the purchaser thereof, as its exclusive remedy, shall upon prompt notice to VAT of any such defect or failure and upon the return of the product, part or component in question to VAT at its factory, with transportation charges prepaid, and upon VAT's inspection confirming the existence of any defect inconsistent with said warranty or any such failure, be entitled to have such defect or failure cured at VAT's factory and at no charge therefor, by replacement or repair of said product, as VAT may elect. VAT MAKES NO WARRANTY OR REPRESENTATION OF ANY KIND, EXPRESS OR IMPLIED, (INCLUDING NO WARRANTY OR MERCHANTABILITY), EXCEPT FOR THE FOREGOING WARRANTY AND THE WARRANTY THAT EACH PRODUCT SHALL CONFORM TO THE DESCRIPTION THEREOF CONTAINED HEREIN, and no warranty shall be implied by law.
Furthermore, the «Terms of sale» at the back of the price list are applicable.

Supplement to «Installation, Operating and Maintenance Instructions»
Zusatz zu «Montage-, Betriebs- und Serviceanleitung»

Other languages on following pages

General Safety Instructions

1. VAT Products are compliant with the CE standards for machines (Machinery Directive 89/392 EEC) and are subject to the safety instructions when they leave the factory. A «CE Declaration of Conformity» is supplied with each shipment.

2. STOP **Read this document and the enclosed «Installation, Operating and Maintenance Instructions» — hereafter called IOMI — carefully before you start any other action.**

3. Keep fingers and objects away from the opening of the component. Never touch any moving parts. The component may move in case of a power failure or a loss of compressed air.

4. Parts may be hot. Do not touch!

5. Electrical power and compressed air must be disconnected, when performing any installation or configuration procedures on a component. Observe safety warnings in IOMI. Do not touch any parts under voltage.

6. Component may contain loaded springs and/or air cushions, which may be hazardous, when dismantled. Refer to the IOMI for details.

7. Confirm that the method of transportation is in compliance with the weight of the component. Solenoids, position indicators, connectors or connection cables may not be used for carrying or lifting purposes.

8. Verify that the component does not show any damage from transport, otherwise contact your local VAT representative. Confirm that the shipment contains the items specified on your order.

9. The installation may only be performed by trained personnel.

10. Do not remove plastic wrapping and protective covers of the component, until it is installed.

11. For mechanical installation of vacuum components:
    Confirm that power and compressed air to the component are disconnected, before starting with the mechanical installation. Wear lint-free, clean gloves when touching the part. Clean sealing surfaces carefully after the protective covers have been removed. Make sure, no damage exists on the sealing surface of the vacuum component and the sealing surface that the component will be attached to. Before installing the component, grease the mounting screws of the flanges or use coated screws. Tighten the screws uniformly in crosswise order by observing the specified tightening torque.

12. For electrical installation:
    Make sure, component is properly installed mechanically, before starting with the electrical installation. Follow the procedures specifed in the IOMI. Confirm that all supplies, i.e. electrical power and compressed air, are disconnected, before starting with the installation. Verify the supply voltage/s to the component match/es the voltage/s specified on the component or in the IOMI. Confirm that proper electrical ground exists, if an electrical ground connection is specified in the IOMI.

13. Do not switch on power, until the installation is completed. Switch-off power to the component before you perform any maintenance or remove the component.

14. For vacuum components:
    After the installation perform a helium leak check to assure vacuum integrity. Be aware of helium permeation through elastomer seals, when performing the leak test.

15. Avoid misuse of component. Use component **only** under the operating conditions (example: pressure, temperature range, maximal forces) specified in the IOMI. VAT is not liable for any damages resulting from inappropriete use of the component.

16. Follow preventive maintenance and service procedures specified in the IOMI. Use VAT manufactured spare parts only to assure safe and reliable operation of the component.

VAT Vakuumventile AG, CH-9469 Haag, Switzerland
Tel ++41 81 771 61 61 Fax ++41 81 771 48 30 Email reception@vat.ch http://www.vatvalve.com

D

Generelle Sicherheitsvorschriften

1. VAT-Produkte entsprechen den EG-Richtlinien für Maschinen (Maschinen-Richtlinie 89/392 EEC) und erfüllen die Sicherheitsvorschriften beim Verlassen des Werks. Eine EG-Konformitätserklärung wird jeder Lieferung beigelegt.
2. **Dieses Dokument und die beiliegende «Montage-, Betriebs- und Serviceanleitung» — im folgenden MBA genannt — sind sorgfältig zu lesen, bevor weitere Schritte unternommen werden.**
3. Finger und Gegenstände nicht in die Ventilöffnung halten. Bewegte Teile nicht berühren. Bei Strom- oder Pressluftausfall kann sich der Ventilteller bewegen.
4. Heisse Oberflächen. Nicht berühren!
5. Zum Ein- und Ausbauen der Komponente und für Konfigurierungen Strom- und Pressluftleitungen abhängen. Sicherheitshinweise in der MBA beachten. Spannungsführende Teile nicht berühren.
6. Gespannte Federn und/oder Luftpolster sind Gefahrenquellen. Beschreibung in der MBA beachten.
7. Geeignete Hilfsmittel für den Transport verwenden. Ventil nicht an Steckern, Anschlusskabeln, Endschaltern oder Steuerventil hochheben.
8. Lieferung auf Vollständigkeit und Transportschäden kontrollieren. Im Fehlerfall sofort lokale VAT-Vertretung benachrichtigen.
9. Installation des Ventils durch geschultes Personal.
10. Plastikverpackungen und Schutzabdeckungen erst unmittelbar vor der Installation entfernen.
11. Mechanischer Einbau von Vakuum-Komponenten:
    Vor dem Einbau Strom- und Pressluftleitungen abhängen. Vakuumflächen nur mit sauberen, staubfreien Handschuhen berühren. Dichtflächen des Ventils und des Gegenflansches kontrollieren und sorgfältig reinigen. Beim Ventileinbau geschmierte oder oberflächenbehandelte Befestigungsschrauben für die Flansche verwenden. Schrauben kreuzweise gleichmässig anziehen. Angegebene Anzugsdrehmomente beachten.
12. Elektrischer und pneumatischer Anschluss:
    Anschluss erst nach dem Einbau des Ventils durchführen. MBA beachten. Strom- und Pressluftversorgung vor dem Anschliessen abschalten. Die Versorgungsspannung muss mit den Angaben auf dem Ventil und der MBA übereinstimmen. Vorgeschriebene Erdungen sorgfältig durchführen.
13. Stromversorgung erst nach vollständiger Installation einschalten. Für Reparaturarbeiten und Ausbau des Ventils Strom- und Pressluftversorgung abhängen.
14. Vakuumkomponenten:
    Nach der Installation Helium-Lecktest durchführen. Helium-Permeation durch die Elastomerdichtungen berücksichtigen.
15. Eine missbräuchliche Verwendung der Komponente ist nicht erlaubt. Die Komponente darf **nur** unter den in der MBA angegebenen Betriebsbedingungen (z. B. Druck, Temperaturbereich, Maximalkräfte) verwendet werden. Für Schäden, die auf unsachgemässe Verwendung zurückzuführen sind, übernimmt VAT keine Haftung.
16. Der einwandfreie Betrieb der Komponente erfordert die in der MBA angeführten Wartungsarbeiten. Es dürfen nur Original-VAT-Ersatzteile verwendet werden.

F

Prescriptions de sécurité générales

1. Les produits VAT sont conformes aux directives de la CEE en matière de machines (Directives Machines 89/392 EEC) et répondent à toutes les exigences de sécurité en sortant de fabrication. Une «déclaration de conformité CE» est jointe à chaque livraison.
2. **Ce document est à lire attentivement ainsi que les «Instructions de Montage, Mise en Service et d'Entretien» ci-joints, appelées «IMMSE» ci-après, avant d'entreprendre toute action. Ces IMMSE s'appliquent à tous nos composants.**
3. Ne mettez pas les doigts ni aucun objet devant l'ouverture du composant. Ne pas toucher les pièces en mouvement. Lors de coupure de courant ou d'air comprimé, le composant peut être actionné.
4. Le composant peut être chaud - ne pas le toucher!
5. Lors du montage ou du démontage du composant, ou lors de travaux de configuration, les câbles d'alimentation électrique et l'air comprimé doivent être débranchés. Respectez les consignes de sécurité précisées dans les IMMSE. Ne pas toucher les pièces sous tension.
6. Des ressorts tendus et/ou des volumes d'air comprimé à l'intérieur du composant peuvent présenter un danger lors du démontage. Consultez les IMMSE pour de plus amples informations.
7. Les moyens de transport seront adaptés en fonction du poids du composant. Aucun élément: électrovannes, indicateurs de position, prises ou câbles d'alimentation, ne doit servir à soulever ou manipuler le composant.
8. Vérifiez que le matériel est conforme à votre commande et qu'il n'a subi aucun dommage en cours de transport (sinon prévenir immédiatement le représentant VAT le plus proche).
9. L'installation sera effectuée par du personnel qualifié.
10. Ne pas retirer l'emballage plastique et les caches de protection avant son installation.
11. Installation mécanique des équipements du vide:
    Avant de procéder au montage mécanique, assurez-vous que le composant n'est pas sous tension et que l'air comprimé n'est pas connecté. Porter des gants propres, exempts de peluches, pour manipuler les pièces. Après retrait des caches de protection, nettoyer soigneusement les surfaces d'étanchéité. Vérifier que les surfaces d'étanchéité des brides du composant et des contre-brides sont en parfait état. Avant d'installer le composant, graisser les vis de fixation des brides ou utiliser des vis traitées. Serrer les vis uniformément en procédant en croix et en respectant le couple de serrage indiqué.
12. Installation électrique:
    Assurez-vous que l'installation mécanique a été effectuée correctement avant de procéder à l'installation électrique. Suivez les instructions des IMMSE. Avant d'effectuer le câblage, vérifier que les alimentations en électricité et en air comprimé sont débranchées. Vérifier que la tension d'alimentation est conforme à la tension mentionnée sur le composant ou dans les IMMSE. Si les IMMSE prévoient un branchement à la terre, celui-ci doit être réalisé selon les normes.
13. Ne mettre sous tension qu'une fois l'installation terminée. Couper toute alimentation avant d'entreprendre des travaux de réparation ou de démontage du composant.
14. Composants pour le vide:
    Après installation, effectuer un test à l'Hélium pour vérifier l'étanchéité en veillant à la perméation de l'Hélium à travers les joints élastomère.
15. Evitez toute utilisation inappropriée. Le composant ne doit être mise en oeuvre **que** dans les conditions indiquées aux IMMSE (par ex. pression, température, forces admissibles). Pour tout dommage résultant d'une utilisation non adaptée, la responsabilité de VAT ne saurait être engagée.
16. Les travaux d'entretien préconisés dans les IMMSE doivent être effectués pour assurer le fonctionnement optimum du matériel. N'utilisez que des pièces de rechange d'origine VAT.

I

Istruzioni generali di sicurezza

1. I prodotti VAT sono conformi agli standards CE per macchinari (direttiva sui macchinari 89/392 EEC) e sono conformi alle norme di sicurezza quando lasciano lo stabilimento. Una dichiarazione di conformità CE è fornita in ogni spedizione.
2. **Prima di iniziare qualsiasi manovra, leggere attentamente questo documento e le istruzioni di montaggio, di funzionamento e di manutenzione allegate — da qui in poi chiamate IMFM.**
3. Tenere lontano oggetti e dita dall'apertura dei componenti. Non toccare mai nessuna parte in movimento. I componenti potrebbero muoversi in caso di mancanza di corrente elettrica o di perdita di aria compressa.
4. Il componente potrebbe essere rovente. Non toccare!
5. La corrente elettrica e l'aria compressa devono essere staccate nel caso in cui si inizi con il montaggio o si configurino procedure su un componente. Osservare le avvertenze di sicurezza dell'IMFM. Non toccare nessuna parte carica di elettricità.
6. I componenti potrebbero contenere molle tese e/o cuscinetti d'aria, che, se smontati, possono essere pericolosi.

7. Il mezzo di trasporto e l'imballaggio devono essere adeguati al peso del componente. Indicatori di posizione, elettrovalvole, connettori o cavi di collegamento non devono essere usati come appigli di sollevamento.
8. Verificare che il componente non mostri alcun danno causato dal trasporto, diversamente contattare la nostra rappresentanza locale, e che la spedizione corrisponda al Vs. ordine.
9. L'istallazione può essere eseguita solo da personale specializzato.
10. L'imballo di plastica e quello protettivo devono essere rimossi solo prima dell'istallazione del componente.
11. Istallazione meccanica dei componenti da vuoto:
    Prima di iniziare l'istallazione meccanica, accertarsi che la corrente elettrica e l'aria compressa siano staccate. Indossare guanti puliti e privi di polvere quando si toccano i componenti. Pulire accuratamente le superfici di tenuta, dopo aver rimosso l'involucro protettivo. E'necessario controllare che le superfici di tenuta del componente e delle controfacce si trovino in perfetto stato. Prima di istallare il componente, lubrificare le viti di fissaggio delle flange o utilizzare viti trattate. Le viti vanno strette con la coppia prestabilita e omogenea, stringendo in modo incrociato fino a raggiungere la coppia stabilita.
12. Istallazione elettrica:
    Prima di iniziare l'istallazione elettrica, verificare che l'istallazione meccanica del componente sia stata corretta. Seguire le procedure specificate nell'IMFM. Prima di iniziare l'istallazione, assicurarsi che la corrente elettrica e l'aria compressa siano staccate. Verificare che il/i voltaggio/i del componente sia/no pari al/ai voltaggio/i specificato/i sul componente o nell'IMFM. Nel caso in cui sia specificato nell'IMFM una messa a terra, rispettare scrupolosamente i criteri della messa a terra.
13. La corrente elettrica deve essere attivata solo dopo che l'istallazione è stata completamente portata a termine. Disattivare la corrente elettrica del componente prima di eseguire qualsiasi operazione di manutenzione o di rimuovere il componente.
14. Per componenti da vuoto:
    Dopo l'istallazione eseguire un leak-test con elio per assicurare l'integrità del vuoto. Tuttavia, è necessario prendere in considerazione la permeazione dell'elio attraverso le guarnizioni elastomere, quando si esegue il leak-test.
15. Evitare l'uso improprio dei componenti. Manovrare il componente **solo** secondo le condizioni di funzionamento specificate nell'IMFM (es. pressione, temperatura, resistenze massime). La VAT declina qualsiasi responsabilità per danni dovuti a uso improprio del componente.
16. Seguire la manutenzione preventiva e le procedure di service specificate nell'IMFM. Usare solo parti di ricambio originali VAT per assicurare un funzionamento sicuro e attendibile del componente.

E

Instrucciones generales de seguridad

1. Los productos VAT son conformes a las normas de la CE para máquinas (Directiva de máquinas 89/392 CEE) y cumplen las instrucciones de seguridad al salir de fábrica. Se distribuye una «Declaración de conformidad de la CE» en cada envío.
2. **Lea, antes de nada y detenidamente, este documento y las «Instrucciones de Instalacíon, Operación y Mantenimiento» adjuntas — denominadas IIOM a partir de este momento.**
3. Mantenga los dedos u otros objetos fuera de la zona de apertura del componente. No toque nunca las partes móviles. El componente puede moverse en caso de fallo de energía eléctrica o pérdida de aire comprimido.
4. El componente puede estar caliente. No tocar!
5. La alimentación eléctrica y el aire comprimido deben de desconectarse al realizar cualquier trabajo de instalación o configuración en un componente. Observe las recomendaciones de seguridad en las IIOM. No tocar las piezas cargadas electricamente.
6. Los componentes pueden contener muelles bajo presión o cojines de aire, que pueden ser peligrosos al desmontarlos. Para más detalles, diríjase a las IIOM.
7. Compruebe que el medio de transporte es el más idóneo según el peso del componente. Los solenoides, indicadores de posición, conectores o cables de conexión no pueden ser utilizados para transportar o levantar el componente.
8. Compruebe que el componente no muestra daños producidos en el transporte, en cuyo caso contacte con el representante local de VAT. Compruebe que el envío contiene los artículos especificados en su pedido.
9. La instalación debe de ser realizada solo por personal cualificado.
10. No quite el envoltorio de plástico ni las tapas protectoras del componente hasta que sea instalado.
11. Para la instalación mecánica de componentes de vacío:
    Compruebe que la alimentación eléctrica y el aire comprimido estén desconectados del componente antes de comenzar con la instalación mecánica. Use guantes limpios y que no dejen hilos o pelusa al tocar el elemento. Limpie cuidadosamente las superficies de sellado una vez que quite las tapas protectoras. Cerciorese de que no existe daño alguno en la superficie de sellado del componente de vacío así como la superficie del componente al que se conectará. Antes de instalar el componente, engrase los tornillos de montaje de las bridas o utilice tornillos metalizados. Ate las tuercas uniformemente en orden transversal, observando el par de apriete especificado.
12. Para la instalación eléctrica:
    Asegúrese que el componente está bién instalado mecánicamente antes de comenzar con la instalación eléctrica. Siga los procedimientos especificados en las IIOM. Compruebe que todas las alimentaciones, o sea, fuerza eléctrica y aire comprimido, están desconectadas antes de empezar con la instalación. Verifique que el voltaje suministrado al componente coincide con el voltaje especificado en el mismo o en las IIOM. Verifique que existe la apropiada conexión a tierra si las IIOM indican la necesidad de dicha conexión a tierra.
13. No conecte la alimentación eléctrica hasta que se complete la instalación. Desconecte la alimentación eléctrica al componente antes de realizar cualquier trabajo de mantenimiento o desmontaje del componente.
14. Para componentes de vacío:
    Una vez instalado realice una detección de fugas por helio para asegurar la integridad del vacío. Al realizar la prueba tenga en cuenta la permeación del helio a través de las juntas de elastómeros.
15. Evite el uso incorrecto del componente. Utilice el componente **solamente** bajo las condiciones de trabajo (por ejemplo: presión, rango de temperatura, fuerzas máximas) especificadas en las IIOM. VAT no se responsabiliza de cualquier daño que resulte del uso inapropiado del componente.
16. Siga los procedimientos de mantenimiento preventivo y servicio especificados en las IIOM. Utilice solo repuestos fabricados por VAT para asegurar así un funcionamiento fiable y seguro del componente.

P

Instruções gerais de segurança

1. Os produtos VAT estão em conformidade com as normas da UE para maquinaria (Directiva CEE 89/392) e seguem as instruções de segurança sempre que saiem da fabrica. A «Declaração de Conformidade CE» é fornecida em conjunto com o equipamento.
2. **Leía atentamente este documento e as «Instruções de Instalação, Operação e Manutenção» — IIOM — antes de executar qualquer outra tarefa.**
3. Mantenha afastados os dedos e quaisquer outros objectos da abertura do componente. Nunca toque em qualquer parte móvel. O componente pode mover-se em caso de uma falha de corrente ou quando perder pressão no ar comprimido.
4. O componente pode estar quente. Não tocar.
5. A alimentação eléctrica e o ar comprimido devem estar desligados, aquando da realização dos procedimentos de instalação ou configuração do componente. Consulte os avisos de segurança na IIOM. Não toque em qualquer contacto eléctrico.
6. O componente pode conter molas em força e/ou bolsas de ar que podem ser perigosas quando desmontadas. Consulte a IIOM para mais detalhes.
7. Confirme se o método de transporte está de acordo com o peso do componente. Os solenoides, indicadores de posição, ligações ou cabos de ligação não podem ser usados para transporte ou como pegas.
8. Verifique se o componente não mostra danos devidos ao transporte, em caso afirmativo contacte o representante local da VAT. Confirme se a encomenda contem todos os componentes encomendados.
9. A instalação só pode ser executada por pessoal devidamente treinado.

10. Não remova o envólucro de plástico e tampas de protecção do componente até ser instalado.
11. Instalação mecânica de componentes de vácuo:
Confirme que a alimentação eléctrica e o ar comprimido para o componente estão desligados antes de proceder à instalação mecânica. Use luvas limpas (sem fios agarrados) quando em contacto com o componente. Depois das tampas de protecção terem sido removidas, limpar as superficies de selagem cuidadosamente. Verifique que não existem danos na superficie de selagem do componente de vácuo e na superficie de selagem no qual o componente será montado. Antes de instalar o componente lubrificar os parafusos de fixação da flange ou utilizar parafusos autolubrificantes. Aperte os parafusos uniformemente em cruz tendo em atenção o torque de aperto especificado.
12. Instalação eléctrica:
Assegure que o componente está devidamente instalado mecanicamente antes de proceder à instalação eléctrica. Siga os procedimentos indicados na IIOM. Confirmar que todas as alimentações, i.e., eléctricas e ar comprimido, estão desligadas antes de começar com a instalação. Verifique se as tensões de alimentação do componente estão de acordo com as tensões indicadas no componente ou na IIOM. Se a IIOM solicitar uma ligação à «terra» verifique se ela existe.
13. Não ligue a alimentação eléctrica até se finalizar a instalação. Desligue a alimentação eléctrica do componente antes de proceder à remoção ou manutenção do componente.
14. Para componentes de vácuo:
Após a instalação deve realizar um teste de fugas de hélio para assegurar a integridade do vácuo. Tenha em atenção a permeação do hélio através das selagens de elastómero quando realizar o teste de fugas.
15. Evite a má utilização do componente. Utilize **univamento** o componente nas condições do funcionamento (pressão, intervalo de temperatura, forças máximas) indicados na IIOM. A VAT não é responsável por qualquer dano resultante da má utilização do componente.
16. Execute as manutenções preventivas e os procedimentos de reparação indicados na IIOM. Utilize apenas peças de origem VAT para assegurar o funcionamento fiável e seguro do componente.

NL

Algemene Veiligheidsinstructies

1. VAT producten zijn in overeenstemming met de CF-standaarden voor machines (Machinery Directive 89/392 EEC) en voldoen aan de veiligheidsinstructies als deze de fabriek verlaten. Een «CE Declaration of Conformity» wordt met elke levering meegezonden.
2. **Lees dit document en de ingesloten «Installation, Operating and Maintenance Instructions» — hierna genoemd IOMI — zorgvuldig voordat men verdere acties onderneemt.**
3. Houdt geen vingers of andere voorwerpen voor de opening van het onderdeel. Raak geen bewegende delen aan. Het onderdeel kan bewegen in geval van krachtonderbreking of verlies aan gecomprimeerde lucht.
4. Onderdeel kan heet zijn. Niet aanraken.
5. Electrische aansluiting en gecomprimeerde lucht moet worden onderbroken, als er aan het betreffende component wordt gewerkt. Let op veiligheidsvoorschrift in IOMI. Raak geen electrisch geladen delen aan.
6. Onderdeel kan veren en/of luchtkussens bevatten, die gevaar kunnen opleveren bij demontage. Zie IOMI voor details.
7. Let op dat de transportmethode in overeenstemming is met het gewicht van het onderdeel. Magneetkleppen, positieindicators, verbindingen of connectie-kabels mogen niet gebruikt worden om te dragen of het onderdeel op te lichten.
8. Controleer het onderdeel op beschadigingen ontstaan tijdens transport. Indien dit het geval is, neem contact op met de VAT-vertegenwoordiger. Controleer of de zending het bestelde onderdeel bevat.
9. Het instellen van het onderdeel dient te geschieden door vakbekwaam personeel.
10. Verwijder geen plastic verpakking of beschermkappen voordat het onderdeel is geinstalleerd.
11. Mechanische installatie van vacuum-onderdelen:
Voor het begin van de werkzaamheden moeten de electrische en/of pneumatische verbindingen verbroken worden. Draag gladde en schone handschoenen. Maak de afdichtingsoppervkakken zorgvuldig schoon nadat de beschermkappen zijn verwijderd. Controleer het afdichtingsoppervlak van de afsluiter en van het bevestigingsdeel op beschadigingen. Montagemoeren moeten voor montage ingevet worden of men moet gecoate moeren toepassen. Draai de moeren kruiselings aan met het aangegeven moment.
12. Electrische installatie:
Controleer of het onderdeel mechanisch correct is geinstalleerd, voordat men met de electrische installatie begint. Volg de procedures zoals beschreven in IOMI. Controleer eerst of de electrische of pneumatische aansluitingen zijn verbroken. Controleer of de electrische spanning overeenkomt met de benodigde spanning van het onderdeel. Controleer of de aarding correct is indien dit gespecificeerd is in IOMI.
13. Sluit geen kracht (electrisch of pneumatisch) aan, voordat de installatie geheel gereed is. Kracht uitschakelen voor het uitvoeren van onderhoudswerkzaamheden of het verwijderen van het onderdeel.
14. Voor vacuum-componenten:
Na het installeren op lekdichtheid controleren met He-vacuummeter. Let op doorlaten van Helium door elastomere afdichtingen gedurende de test.
15. Voorkom verkeerd gebruik van component. Gebruik component **uitsluitend** onder werkomstandigheden (bijv. druk, temperatuurbereik, max. krachten) zoals gespecificeerd in IOMI. VAT is niet verantwoordelijk voor schades ontstaan door oneigenlijk gebruik.
16. Volg de preventieve onderhouds-en service procedures op zoals beschreven in IOMI. Gebruik alleen originele VAT-onderdelen om verzekerd te zijn van een veilige en betrouwbare werking van het component.

DK

Generel sikkerhedsinstruktion

1. VAT produkter er i overensstemmelse med CE-retningslinier for maskiner (Maskindirektivet 89/3 92 EØC) og opfylder sikkerhedsforskrifterne, når de forlader fabrikken. En CE konformitetserklaering vil vaere bilagt alle leveringer.
2. **Dette dokument og de bilagte «montage- drift- og serviceinstruktioner» — i det følgende kaldt MDS — bør omhyggeligt laeses, før noget andet foretages.**
3. Fingre og objekter skal holdes vaek fra åbninger i komponenten. Rør aldrig ved bevaegelige dele. Ved fejl i el- eller tryklufttilførsel kan dele af komponenten bevaege sig.
4. Komponenten kan vaere varm. Bør derfor ikke berøres.
5. El- og tryklufttilførsel bør afbrydes under montage, aendringer eller reparationsarbejde. Sikkerhedsanvisningerne i MDS skal følges. Spaendingsførende dele må ikke berøres.
6. Spaendte fjedre eller luftlommer kan frembryde en fare ved demontering. Bemaerk beskrivelse i MDS.
7. Transportmetoden skal tilpasses komponentens vaegt. Styreventiler, positionsmeldere, stik og tilslutningskabler må ikke bruges til at baere eller løfte komponenten i.
8. Kontroller om komponenten er transportskadet. I givet fald kontakt den lokale VAT forhandler. Kontroller at det leverede er i overensstemmelse med bestillingen.
9. Installation må kun udføres af uddannet personale.
10. Plastemballage og beskyttelsesdaeksler bør først fjernes umiddelbart før montage.
11. Mekanisk installation af komponenten:
El og tryklufforbindelser skal vaere fjernet før den mekaniske installation begyndes. Ved berøring af delene bør anvendes støvfri, rene handsker. Efter at beskyttelsesdaeklerne er fjernet skal pakflademe renses omhyggeligt. Kontroller at komponentens pakningsflader og de flader som skal passe med komponenten er fejlfri. Før installation skal montageskruerne smøres med fedt eller der bør anvendes coatede skruer. Skruerne tilspaendes krydsvis under iagttagelse af det tilladelige tilspaendingsmoment.
12. Elektrisk installation:
Den mekaniske installation skal vaere afsluttet før el installation påbegyndes. Anvisningerne i MDS skal iagttages. Samtlige forsyningskilder f.eks. elektrisk og trykluft tilgang skal vaere afbrudt før installation begyndes. Forsyningsspaendingerne skal svare til den på komponenten eller den i MDS angivne spaending. Kontroller at beskyttelsesledningen er effektiv, hvis en sådan er kraevet.
13. Slut ikke spaending til før installationen er faerdig. El tilslutning til komponenten skal vaere afbrudt før reparationsarbejder påbegyndes eller komponenten skal afmonteres.

14. Vakuumkomponenten:
Efter installation foretages en Heliumlaeksøgning, for at prøve taetheden. Vaer opmaerksom på heliumgennemtraengeligheden af elastomere taetninger.
15. Uhensigtsmaessig brug af komponenten bør forhindres. Komponenten må **kun** anvendes under de driftbetingelser (d.v.s. tryk, temperaturområde, max. kraefter) som angivet i MDS. For skader opstået ved uhensigtsmæssig anvendelse påtager VAT sig ingen erstatningsforpligtelser.
16. Følg procedure for forebyggende vedligeholdelse og service, som er angivet i MDS for at undgå driftsforstyrrelser. Der bør kun anvendes originale VAT reservedele.

S

Allmänna säkerhetsföreskrifter

1. VATs produkter är i överensstämmelse med EUs standard för maskiner (Machinery Directive 89/392 EEC) och möter säkerhetsföreskrifterna när de lämnar fabriken. En «CE Declaration of Conformity» medföljer varje leverans.
2. **Läs igenom detta dokument och bifogade «Installation, Operating and Maintenance Instructions (Installations-, drifts- och underhållsinstruktioner)» — vilken härofter kallas IOMI — mycket noggrannt innan ni påbörjar något jobb.**
3. Håll fingrar och föremål borta från komponentens öppning. Rör aldrig några rörliga delar. Komponenten kan röra på sig vid spännings- eller tryckluftsbortfall.
4. Komponenten kan vara varm. Rör den inte.
5. Elförsörjning och tryckluft måste kopplas bort vid installation eller justering av komponenten. Observera säkerhetsvarningen i IOMI. Rör inga elektriskt laddade delar.
6. Komponenten kan innehålla spända fjädrar och/eller luftkuddar, som kan vara riskabla att frikoppla. För närmare detaljer, se IOMI.
7. Kontrollera att transportsättet är i överensstämmelse med komponentens vikt. Solenoider, positionsgivare, anslutningar eller anslutningskablar får ej användas för att bära eller lyfta komponenten.
8. Kontrollera att komponenten inte har blivit skadad vid transporten, kontakta i så fall er lokala VAT representat. Bekräfta att leveransen innehåller de delar som specificerats i er order.
9. Installationen får endast utföras av utbildad personal.
10. Ta inte bort plastemballage eller skyddskåpa från komponenten, innan den har blivit installerad.
11. Vid mekanisk installation av vakuum komponenter:
Kontrollera att spänning och tryckluft till komponenten är avstängda innan ni påbörjar den mekaniska installationen. Använd luddfria, rena handskar (renrumskvalitet) när ni tar i delen. Rengör förslutningsytorna noggrant när skyddshöljena har tagits bort. Kontrollera att ingen skada har uppstått på vakuumkomponentens förslutningsyta eller på den förslutningsyta som komponenten skall kopplas till. Innan ni börjar installera komponenten, se också till att flänsens monteringsskruvar smörjs eller använd belagda skruvar. Dra åt skruvarna enhetligt i korsvis ordning genom att observera det specificerade tätningsvridmomentet.
12. Vid elektrisk installation:
Se till att den mekaniska installationen av komponenten har utförts riktigt innan ni påbörjar den elektriska. Följ de procedurer som specificerats i IOMI. Säkerställ att försörjningen av elektrisk ström och tryckluft, är urkopplad innan ni påbörjar installationen. Kontrollera att den tillkopplade spänningen matchar den spänning som specificerats på komponenten eller i IOMI. Kontrollera att en godkänd elektriskt jordad kontakt finns att tillgå om en sådan specificerats i IOMI.
13. Slå inte på spänningen innan installationen är helt färdig. Bryt spänningen till komponenten innan ni påbörjar något underhållsarbete eller kopplar bort komponenten.
14. För vakuumkomponenter:
När installationen är avslutad gör en heliumläcktest för att vara säker på att utrustningen är vakuumtät. Var uppmärksam på att helium kan tränga igenom förseglingen av elastomer under tiden ni genomför läcktesten.
15. Undvik felaktig användning av komponenten. Använd komponenten **endast** under de arbetsförhållanden (t.ex. tryck, temperaturområde, maximala krafter) som specificerats i IOMI. VAT är inte ansvariga för några skador som orsakas av felaktig användning av komponenten.
16. Följ de förebyggande underhålls- och serviceprocedurer som specificerats i IOMI. Använd endast VAT tillverkade reservdelar för att säkerställa en säker och tillförlitlig användning av komponenten.

SF

Yleiset turvallisuusohjeet

1. VAT-tuotteet noudattavat EU:n konestandardeja (konedirektiivi 89/392 EEC) ja vastaavat niiden turvallisuusvaatimuksia lähtiessään tehtaalta. EU-vaatimustenmukaisuusvakuutus toimitetaan jokaisen lähetyksen mukaan.
2. **Lue huolellisesti nämä ohjeet ja liitteinä mukaan toimitetut asennus-, käyttö- ja kunnossapito-ohjeet — joista käytetään jatkossa lyhennettä IOMI — ennen minkään työn aloittamista.**
3. Älä työnnä sormiasi tai mitään esineitä laitteen aukkoihin. Älä koske koskaan liikkuviin osiin. Laite voi liikahtaa virta- tai paineilmakatkoissa.
4. Rakenneosa voi olla kuuma. Älä koske!
5. Virta ja paineilma on katkaistava kaikissa rakenneosan asennus- tai muutostöissä. Huomioi IOMIn varomääräykset. Älä koske mihinkään osiin, joissa on sähkövaraus.
6. Laitteessa voi olla jännitystilassa olevia jousia ja/tai ilmatyynyjä, joiden purkaminen voi olla vaarallista. Katso tarkemmin IOMIsta.
7. Varmista kuljetustavan soveltuvan laitteen painoon. Magneettiventtiilejä, asennonosoittimia, liittimiä tai liitäntäkaapeleita ei ole tarkoitettu kantamiseen tai nostoihin.
8. Varmista, ettei rakenneosassa näy kuljetusvaurioita. Ota muussa tapauksessa yhteys VATin paikalliseen edustajaan. Varmista lähetyksen sisältävän kaikki tilauksessasi esitetyt osat.
9. Asennuksen saa tehdä vain koulutettu henkilöstö.
10. Älä poista muovisuojusta tai suojakoteloa, ennenkuin laite on asennettu.
11. Tyhjöosien asentaminen:
Tarkista ennen asennustöiden aloittamista, että koneen virransyöttö ja paineilma on katkaistu. Käytä nukkaamattomia, puhtaita käsineitä kosketellessasi osia. Puhdista tiivistyspinnat huolellisesti suojapäällysteiden poiston jälkeen. Varmista, etteivät tyhjöosat eivätkä niiden vastakappaleiden tiivistyspinnat ole vaurioituneet. Rasvaa laippojen kiinnitysruuvit ennen asennusta tai käytä pinnoitettuja ruuveja. Kiristä ruuvit ristikkäin esitettyyn kiristystiukkuuteen.
12. Sähkökytkennät:
Tarkista ennen kytkentätöiden aloittamista, että rakenneosa on asennettu paikalleen oikein. Noudata IOMIssa esitettyjä ohjeita. Varmista ennen sähköasennusten aloittamista, että virran ja paineilman syöttö on katkaistu. Varmista rakenneosalle tulevien käyttöjännitteiden vastaavan rakenneosaan merkittyjä tai IOMIssa esitettyjä jännitteitä. Varmista asianmukaisen maadoituksen olevan paikalla, jos tämä on tarkennettu IOMIssa.
13. Älä kytke sähköä, enenkuin asennus on valmis. Katkaise laitteen virta aina ennen kunnossapitotöitä tai laitteen irroittamista.
14. Tyhjöosat:
Tee asennuksen jälkeen heliumvuotokoe varmistaaksesi tyhjön eheyden. Älä unohda, että helium voi tunkeutua vuotokokeessa elastomeeritiivisteiden läpi.
15. Vältä rakenneosan väärää käyttöä. Käytä osaa vain IOMIssa esitetyissä käyttöedellytyksissä (esim. paine, sallitut lämpötilat, suurimmat sallitut voimat). VAT ei vastaa rakenneosan sopimattomasta käytöstä aiheutuneista vahingoista.
16. Noudata IOMIn ohjeita ennakoivasta kunnossapidosta ja huollosta. Käytä vain VATin valmistamia varaosia laitteen turvallisen ja luotettavan toiminnan varmistamiseksi.

GR

ΓΕΝΙΚΕΣ ΟΔΗΓΙΕΣ ΑΣΦΑΛΕΙΑΣ

1. Τα προϊόντα της VAT είναι συμφωνα με τους κανονισμούς CE για μηχανηματα (MACHINERY DIRECTIVE 89/392 EEC) και πληρούν όλες τις προυποθέσεις ασφαλειας όταν φευγουν από το εργοστασιο. Ενα πιστοποιητικό συμφωνιας των κανονισμών CE παρέχεται με καθε αποστολή.
2. Διαβάστε αυτό το έγγραφο καθώς και τις οδηγίες "ΕΓΚΑΤΑΣΤΑΣΗΣ ΛΕΙΤΟΥΡΓΙΑΣ ΚΑΙ ΣΥΝΤΗΡΗΣΗΣ" (IOMI) προσεκτικά πρίν από οποιαδήποτε άλλη ενέργεια.
3. Κρατείστε δάκτυλα και αντικείμενα μακριά από το άνοιγμα του εξαρτήματος. Ποτέ μην αγγίζετε κινουμενα τμηματα. Το εξάρτημα μπορεί να κινηθεί σε περίπτωση διακοπης ρευματος η απώλειας πεπιεσμενου αέρα.
4. Το εξάρτημα μπορεί να είναι ζεστό. Μην αγγίζετε!
5. Η ηλεκτρική παροχή και ο πεπιεσμένος αέρας πρέπει να αποσυνδεθούν κατά την εγκατάσταση και παραμετροποίηση του κάθε εξαρτήματος. Προσοχή στα μέτρα ασφαλείας στις οδηγίες IOMI. Μην αγγίζετε τα ηλεκτρικά φορτισμένα τμήματα.
6. Το εξάρτημα μπορεί να περιεχει ελατήρια και/ή στρώματα αέρα που μπορεί να είναι επικίνδυνα κατα την αποσυνδεσή του. Αναφερθείτε στις οδηγιες IOMI για λεπτομερειες.
7. Βεβαιωθείτε ότι ο τρόπος μεταφοράς ειναι σύμφωνος με το βάρος του εξαρτηματος. Τα σωληνοειδή, οι δεικτες θέσεως, οι συνδεσμοι και τα συνδετικα καλώδια μπορεί να μην αντέχουν σε μεταφορα ή σε ανύψωση του μηχανηματος.
8. Βεβαιωθείτε ότι το εξάρτημα δεν παρουσιάζει κατια ζημια απο την μεταφορα, διαφορετικά επικοινωνειστε με ον τοπικο αντιπροσωπο της VAT. Επιβεβαιώστε ότι η φόρτωση περιέχει τα εξαρτηματα που εχετε παραγγειλει.
9. Η εγκατάσταση πρέπει να γίνει μόνο απο εκπαιδευμένο προσωπικό.
10. Μην αφαιρείτε το πλαστικο περιτυλιγμα και τα προστατευτικά καλύμματα απο το εξάρτημα μεχρι αυτό να εγκατασταθεί.
11. Για την μηχανολογική εγκατασταση των εξαρτημάτων κενού: Βεβαιωθειτε ότι η τροφοδοσία ρεύματος και ο πεπιεσμενος αεας στο εξάρτημα ειναι αποσυνδεδεμενα πρίν ξεκινήσετε την μηχανικη εγκατασταση. Φορεστε καθαρα γάντια όταν ακουμπατε τα τμήματά του. Καθαρίστε προσεκτικα τις συνδετικές επιφανειες αφού αφαιρεθουν τα προστατευτικα καλύμματα. Βεβαιωθείτε ότι δεν υπαρχει καμμία βλάβη στις συνδετικες επιφανειες του εξαρτήματος κενού και στις συνδετικες επιφανειες του εξαρτήματος που θα συνδεθεί. Πρίν την εγκατασταση του εξαρτήματος να λιπάνετε τις βίδες και τις φλάντζες ή να χρησιμοποιήσετε βίδες με επικάλυψη. Σφίξτε τις βίδες σταυρωτά με τον αναφερόμενο τροπο.
12. Για την ηλεκτρική εγκατάσταση:
    Βεβαιωθείτε ότι το μηχάνημα είναι σωστά εγκατεστημένο μηχανολογικα πρίν ξεκινήσετε με την ηλεκτρική εγκατάσταση. Ακολουθήστε τις διαδικασίες που προδιαγράφονται στις οδηγίες IOMI. Βεβαιωθείτε ότι ολες οι παροχές όπως η ηλεκτρική και ο πεπιεσμένος αερας ειναι αποσυνδεδεμένα πρίν ξεκινήσετε με την εγκατάσταση. Βεβαιωθείτε ότι οι τάσεις τροφοδοσίας στο εξάρτημα ταιριάζουν με τις τάσεις που προδιαγραφονται απο τις IOMI. Βεβαιωθείτε ότι υπάρχει η κατάλληλη γείωση εάν αυτή προδιαγράφεται απο τις IOMI.
13. Μην θέσετε σε λειτουργια την τροφοδοσία ρευματος μεχρι να ολοκληρωθεί η εγκατασταση. Αποσυνδέστε την τροφοδοσία ρεύματος στο εξάρτημα πριν του κάνετε οποιαδήποτε συντηρηση ή πριν το αποσυναρμολογήσετε.
14. Για τα εξαρτήματα κενού:
    Μετά την εγκατάσταση ελέγξτε για τυχον διαρροες για να πετυχετε το κατάλληλο κενό. Προσεξτε την διαπέραση ηλίου μέσα απο τις ελαστικές συνδέσεις κατά την εκτέλεση του ελέγχου διαρροης.
15. Αποφύγετε την κακή χρήση του εξαρτήματος.Χρησιμοποιειστε το εξάρτημα μόνο κάτω απο τις συνθήκες λειτουργίας (για παράδειγμα πίεσης, περιοχής θερμοκρασίας, μεγιστων δυνάμεων που επιδρουν επανω του) που προδιαγράφονται απο τις IOMI. Η VAT δεν εγγυαται τις βλάβες που προκύπτουν απο την κακή χρηση του εξαρτηματος.
16. Ακολουθείστε τις προληπτικές οδηγίες συντηρησης που προδιαγραφονται απο τις IOMI. Χρησιμοποιηστε μονο ανταλλακτικα που κατασκευαζονται απο την VAT για να πετύχετε ασφαλή και σίγουρη λειτουργία του εξαρτήματος.

J

一般安全マニュアル（取扱説明書の補足）

1. VAT製品は、CE機械標準（89/392 EEC機械指令）に従って、出荷時に安全マニュアルを付けており、全ての出荷製品が[CE適合宣言]を遵守しております。
2. 梱包を開いたら、あらゆる作業に先立ち、この安全マニュアルと、同封の[据付け、運転操作、メンテナンスマニュアル]（以後［取扱説明書]と略称します）を注意深く読んで下さい。
3. バルブの開口部に手や品物を近ずけないで下さい。可動部分は絶対に触らないで下さい。停電時や圧空が無くなっても、バルブは動くことがあります。
4. 部分的に熱くなっていることがあります。触らないで下さい。
5. 据付けや組立を行う場合は、必ず電気、圧空を外して下さい。[取扱説明書]の中の安全に対する警告に注意して下さい。通電部分には絶対に触らないで下さい。
6. バルブには負荷のかかったスプリングや残った圧空のクッション作用により、急速で危険な動きをする事があります。[取扱説明書]を参照して下さい。
7. バルブの質量に応じた運搬方法を確認して下さい。電磁弁、リミットスイッチ、コネクター、或いはケーブル類を、バルブの持ち上げや運搬の目的に使用しないで下さい。
8. バルブ等に輸送による損傷が無い事を確認して下さい。損傷が見られる場合は当社又は当社代理店まで直ちに連絡して下さい。また梱包の中に、ご注文に明記された品目が、そろっている事を確認下さい。
9. 据付けは、なるべく訓練された経験者が行って下さい。
10. 据付け開始直前又は使用開始直前まで、プラスチック製の梱包や保護カバーを外さないで下さい。
11. 真空バルブの据付けに当たって。
    据付けを始める前に、電源や圧空が外されている事を確認して下さい。真空になる部分を触る時は、繊維の出にくい清浄な手袋をして下さい。保護カバーを外しバルブのシール面と相手側のシール面に損傷が無いことを確認し、注意深くクリーンにして下さい。取り付け用ボルト類のネジ部にモリコート或いはグリースを塗るかコーティングされたネジを使用して下さい。規定の締め付けトルクを参照し、対角線上交互に均等に、しっかりと締め付けて下さい。
12. 電気結線に当たって。
    電気結線に先立ち、バルブが正しく据付けられている事を確認下さい。供給する電圧がバルブ或いは[取扱説明書]に明記された電圧に合っているかを確認下さい。またアース接続が[取扱説明書]に明記されている場合は、適切なアースがある事を確認下さい。
13. 据付けが完全に終わるまで、電源のスイッチを入れないで下さい。いかなるメンテナンスを行う場合も、またバルブを取外す場合も、必ず事前に電源のスイッチを切って下さい。
14. 据付けた後、ヘリュウムリークチェックを行って下さい。更に確認のために、ヘリュウムはエラストマーシールを透過する事に留意下さい。
15. バルブの仕様と異なった使い方はしないで下さい。[取扱説明書]に明記された操作条件（例えば圧力範囲、温度範囲、バルブにかかる許容応力等）の範囲内でのみご使用下さい。VAT社は不適当な使用から発生する損傷には責を負いません。
16. [取扱説明書]に明記された事故予防的メンテナンスとサービス手順に従って下さい。安全で確実な操作のためには、VAT社製のスペアー部品をご使用下さい。